WITTENSTEIN | alpha

LP+/ LPB+

Operating Manual

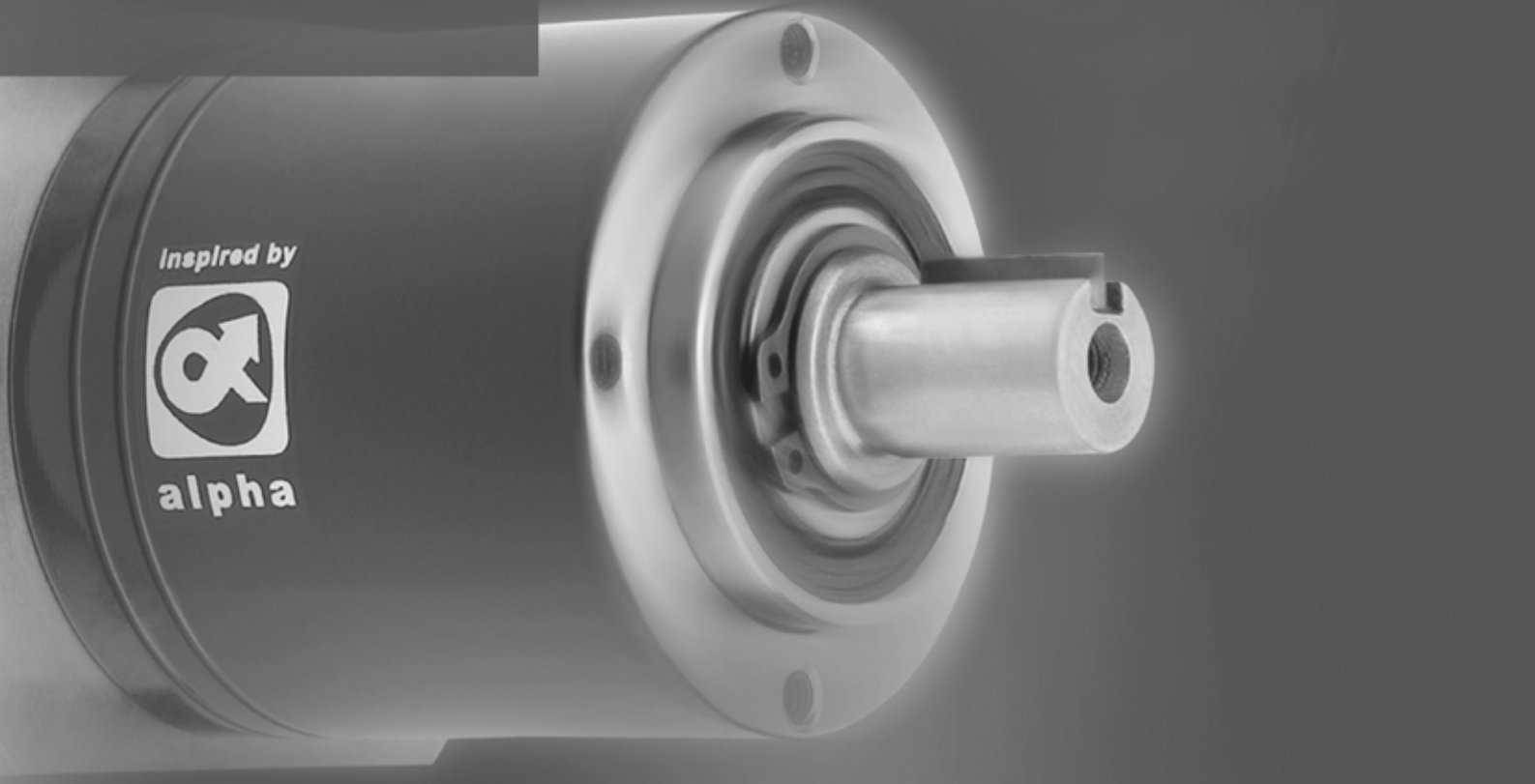

2022-D018479

Revision: 05

Revision history

Revision	Date	Comment	Chapter
01	20.01.03	new version	all
02	16.01.07	technical data updated	6.4.1
03	22.12.08	technical data updated Layout WITTENSTEIN	all
04	01.08.09	Machinery Directive	1, 2, 3, 4, 6
05	07.09.10	technical data updated	5.4, 9.1

Service

In case you have technical questions,
please contact:

WITTENSTEIN alpha GmbH

Customer Service
Walter-Wittenstein-Straße 1
D-97999 Igersheim

Tel.: +49 7931 493-10900

Fax: +49 7931 493-10903

E-mail: service-alpha@wittenstein.de

© WITTENSTEIN alpha GmbH 2010

This documentation is copyright protected.

WITTENSTEIN alpha GmbH reserves all the rights to photo-mechanical reproduction, copying, and the distribution by special processes (such as computers, file media, data networks), even in parts.

Subject to technical and content changes without notice.

Contents

1 Regarding this manual 2
1.1 Signal words 2
1.2 Safety symbols 2
1.3 Design of the safety instructions 3
1.4 Information symbols 3

2 Safety 4
2.1 EC – Machinery directive 4
2.2 Dangers 4
2.3 Personnel 4
2.4 Intended use 4
2.5 Reasonably predictable misuse 4
2.6 Guarantee and liability 4
2.7 General safety instructions 5

3 Description of the gearhead 6
3.1 Overview of the gearhead components 6
3.1.1 Overview of the gearhead components LP+ 6
3.1.2 Overview of the gearhead components LPB+ 6
3.2 Type plate 7
3.3 Ordering key 7
3.4 Performance statistics 8
3.5 Weight 8

4 Transport and storage 9
4.1 Scope of delivery 9
4.2 Packaging 9
4.3 Transport 9
4.4 Storage 9

5 Assembly 10
5.1 Preparations 10
5.2 Mounting the gearhead to a machine (LPB+) 11
5.3 Mounting the motor onto the gearhead (LP+/ LPB+) 12
5.3.1 Pre-mounting adapter plate (only LPB+) 12
5.3.2 Mounting the motor (LP+/ LPB+) 13
5.4 Mounted components on the gear output side 14
5.4.1 Mountings on the output flange (LPB+) 14
5.5 Mounting the gearhead to a machine (LP+) 15

6 Startup and operation 16

7 Maintenance and disposal 17
7.1 Maintenance work 17
7.1.1 Visual inspection 17
7.1.2 Checking the tightening torques 17
7.2 Startup after maintenance work 17
7.3 Maintenance schedule 17
7.4 Notes on the lubricant used 18
7.5 Disposal 18

8 Malfunctions 19

9 Appendix 20
9.1 Specifications on mounting onto a motor 20
9.2 Specifications on mounting onto a machine 20
9.3 Tightening torques for common thread sizes in general mechanics 21

1 Regarding this manual

These instructions contain necessary information for the safe operation of the planetary gearhead LP+/LPB+, referred to as gearhead in the following.

The operator must make sure that this operating manual is read through by all persons assigned to install, operate, or maintain the gearhead, and that they understand them.

Store these instructions within reach near the gearhead.

These **safety instructions** should be shared with colleagues working in the vicinity of the device to ensure individual safety.

The original instructions were prepared in German; all other language versions are translations of these instructions.

1.1 Signal words

The following signal words are used to bring your attention to dangers, prohibitions, and important information:

	⚠ DANGER
	This signal word points to an imminent danger that can cause serious injuries and even death.
	⚠ WARNING
	This signal word points to a possible danger that can cause serious injuries and even death.
	⚠ CAUTION
	This signal word points to a possible danger that can cause slight to serious injuries.
	NOTICE
	This signal word points to a possible danger that can cause material damage.
	A note without signal word draws your attention to application tips or especially important information when handling the gearhead.

1.2 Safety symbols

The following safety symbols are used to bring your attention to dangers, prohibitions, and important information:

General danger

Hot surface

Suspended loads

Danger of being pulled in

Environment protection

Information

1.3 Design of the safety instructions

The safety instructions of this operating manual are designed according to the following pattern:

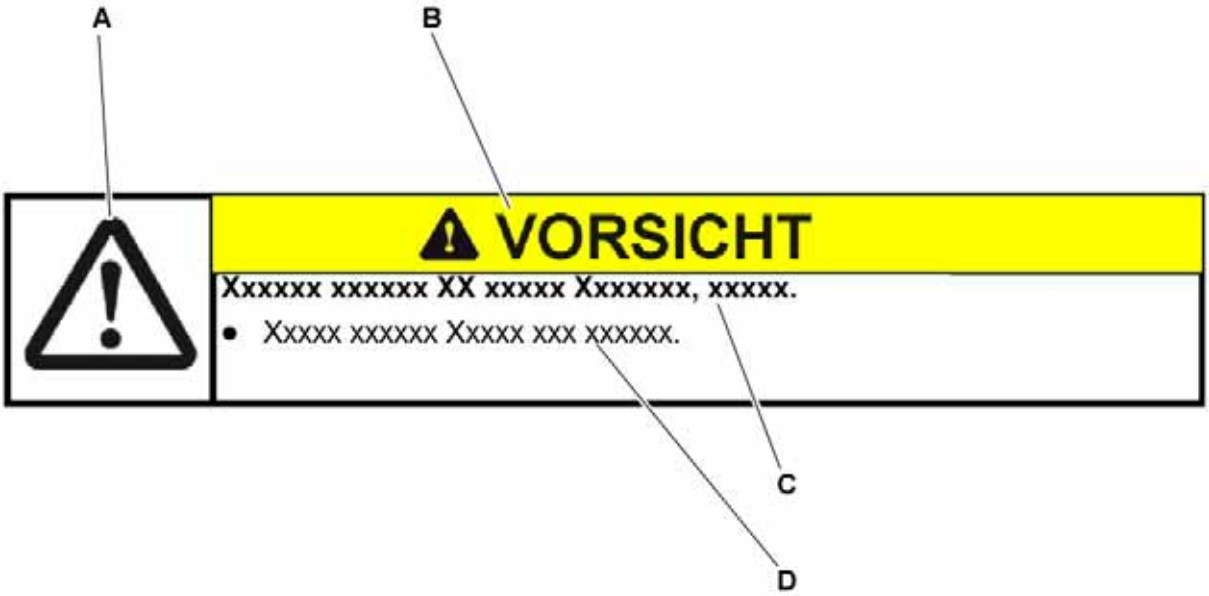

A = Safety symbol (see Chapter 1.2 "Safety symbols")
B = Signal word (see Chapter 1.1 "Signal words")
C = Type and consequence of the danger
D = Prevention of the danger

1.4 Information symbols

The following information symbols are used:

- requires you to carry out an action
  - ➲ indicates the results of an action

ⓘ provides additional information on handling

2 Safety

These instructions, especially the safety instructions and the rules and regulations valid for the operating site, must be observed by all persons working with the gearhead.

In addition to the safety specifications mentioned in this operating manual, the general and also the local regulations on the prevention of accidents (for instance, personal safety equipment) and on environmental protection should be observed.

2.1 EC – Machinery directive

The gearhead is considered a "machine component" and is therefore not subject to the EC Machinery Directive 2006/42/EC.

Operation is prohibited within the area of validity of the EC directive until it has been determined that the machine in which this gearhead is installed corresponds to the regulations within this directive.

2.2 Dangers

The gearhead has been constructed according to current technological standards and accepted safety regulations.

To avoid danger to the operator or damage to the machine, the gearhead may be put to use only for its intended usage (see chapter 2.4 "Intended use") and in a technically flawless and safe state.

- Be informed of the general safety instructions before beginning work. (see Chapter 2.7 "General safety instructions").

2.3 Personnel

Only persons who have read and understood these instructions may carry out work on the gearhead.

2.4 Intended use

The gearhead serves to convert torques and speeds. It is built for industrial applications that do not fall under article 2 of the directive 2002/95/EU (usage restriction of certain dangerous materials on electro and electronic equipment).

The gearhead is specified for installment on motors that:

- correspond to the design B5 (for any divergences, please consult our Customer Service Department [technical customer service])
- show a radial and axial runout tolerance of at least “N” according to DIN 42955 and
- have a smooth shaft

2.5 Reasonably predictable misuse

Any usage that exceeds the maximum permitted speeds, torques and temperature is considered a misuse and is therefore prohibited.

2.6 Guarantee and liability

Guarantee and liability claims are excluded for personal injury and material damage in case of

- Ignoring the information on transport and storage
- Improper use (misuse)
- Improper or neglected maintenance and repair
- Improper assembly / disassembly or improper operation
- Operation of the gearhead when safety devices and equipment are defective
- Operation of the gearhead without lubricant
- Operation of a heavily soiled gearhead
- Modifications or reconstructions that have been carried out without the approval of **WITTENSTEIN alpha GmbH**

2.7 General safety instructions

⚠ WARNING

Objects flung out by rotating components can cause serious injuries.

- Remove objects and tools from the gearhead before putting it into operation.

⚠ WARNING

Rotating components on the gearhead can pull in parts of the body and cause serious injuries and even death.

- Keep a sufficient distance to rotating machinery while the gearhead is running.
- Secure the machine against restarting and unintentional movements during assembly maintenance work.

⚠ CAUTION

Hot gearhead housing can cause serious burns.

- Touch the gearhead housing only when wearing protective gloves or after the gearhead has been at standstill for some time.

NOTICE

Loose or overloaded screw connections can damage the gearhead.

- Use a calibrated torque wrench to tighten and check all screw connections for which a tightening torque has been specified.

Solvents and lubricants can pollute soil and water.

- Use and dispose of cleaning solvents as well as lubricants appropriately.

3 Description of the gearhead

The gearhead is a single- or multistage, low-backlash planetary gearhead, which is manufactured as standard in the "M" version (motor installation). The output shaft bearing is designed to withstand high tilting moments and axial forces.

The motor is centered using the clamping hub and not with the adapter plate. A radial distortion of the motor is avoided.

Adaptation to various motors is done by an adapter plate and a bushing.

The optional LPB+ has an output flange instead of an output shaft. You thus have the option of mounting a toothed belt pulley.

3.1 Overview of the gearhead components

3.1.1 Overview of the gearhead components LP+

		Gearhead components LP+
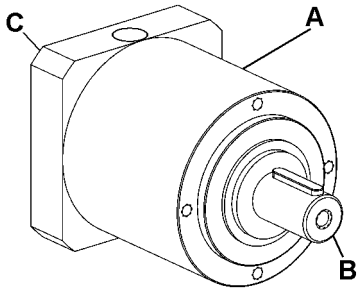	A	Gearhead housing
	B	Output shaft
	C	Adapter plate

Tbl-1: Overview of the gearhead components

3.1.2 Overview of the gearhead components LPB+

		Gearhead components LPB+
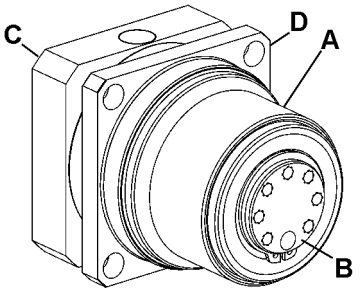	A	Gearhead housing
	B	Output flange
	C	Adapter plate
	D	Mountable flange

Tbl-2: Overview of the gearhead components

3.2 Type plate

The type plate is attached to the gearhead housing.

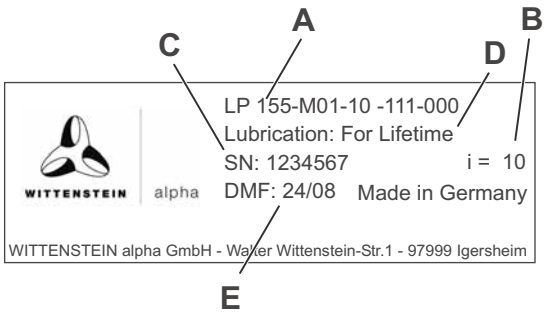

	Designation
A	Ordering key (see chapter 3.3 "Ordering key")
B	Ratio
C	Serial number
D	Lubrication information
E	Production date

Tbl-3: Type plate (sample values)

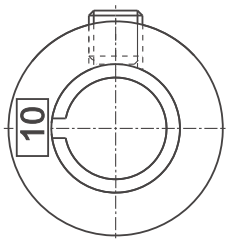

The ratio (e.g. i = 10) can also be found on a label on the plug socket. The bushing is properly aligned when the slit points to the label.

3.3 Ordering key

LPB 090-MO1-3-111

Size
LP+ 050/070/090/120/155
LPB+ 070/090/120

Gearhead versions
M = Motor-mounted gearhead

Gearhead type
O = Standard design

Stage number
1 = 1-stage
2 = 2-stage (only LP+)

Clearance specification
1 = Standard

Bore diameters of the clamping hub
1 = Standard (See catalogue)

Type of output shaft LP+
0 = Smooth shaft
1 = Feather key DIN6885 type A

Type of output shaft LPB+
1 = centering on output side
3 = centering on motor side

Ratio i

3.4 Performance statistics

Please refer to our catalogue or our Internet page for the maximum permitted speeds and torques:http://www.wittenstein-alpha.de

Please consult our Customer Service department if your gearhead is older than a year. You will then receive the valid performance data.

3.5 Weight

The table "Tbl-4" specifies the gearhead dimensions with medium-sized adapter plate. If another adapter plate is mounted, the actual dimensions can deviate by up to 20%.

Gearhead size LP+	050	070	090	120	155
1-stage [kg]	0.75	2.0	4.0	8.6	17.0
2-stage [kg]	0.95	2.4	5.0	11.0	21.0
Gearhead size LPB+	**050**	**070**	**090**	**120**	**155**
1-stage [kg]	—	1.6	3.3	7.3	—

Tbl-4: Weight

4 Transport and storage

4.1 Scope of delivery

- Check the completeness of the delivery against the delivery note.

  ⓘ Missing parts or damage must be notified immediately in writing to the carrier, the insurance, or **WITTENSTEIN alpha GmbH**.

4.2 Packaging

The gearhead is delivered packed in foil and cardboard boxes.

- Dispose of the packaging materials at recycling sites intended for that. Observe the locally valid regulations for disposals.

4.3 Transport

NOTICE

Hard knocks, for instance because of falling or hard dropping, can damage the gearhead.

- Only use hoisting equipment and transports with sufficient capacity.
- The maximum permitted lift capacity of a hoist may not be exceeded.
- Lower the gearhead slowly.

⚠ WARNING

Suspended loads can fall and can cause serious injuries and even death.

- Do not stand under suspended loads.

No special transport mode is prescribed for transporting the gearhead.

Specifications on the weights, refer to Chapter 3.5 "Weight".

4.4 Storage

Store the gearhead in horizontal position and dry surroundings at a temperature of 0 °C to +40 °C in the original packaging. Store the gearhead for a maximum of 2 years.

For storage logistics, we recommend the "first in – first out" method.

5 Assembly

- Be informed of the general safety instructions before beginning work. (see Chapter 2.7 "General safety instructions").

5.1 Preparations

The differences in the assembly sequence of LP+ and LPB+ are listed in the table "Tbl-5".

ⓘ If you have any questions, please contact our Customer Service department.

LP+		LPB+	
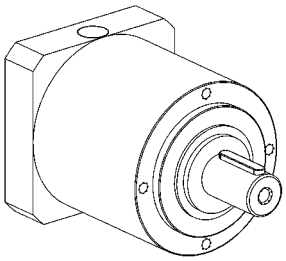	—	**1** 5.2 "Mounting the gearhead to a machine (LPB+)"	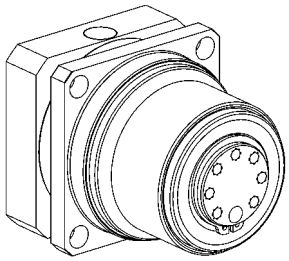
	1 5.3 "Mounting the motor onto the gearhead (LP+/ LPB+)"	**2** 5.3 "Mounting the motor onto the gearhead (LP+/ LPB+)"	
	2 5.4 "Mounted components on the gear output side"	**3** 5.4 "Mounted components on the gear output side"	
	3 5.5 "Mounting the gearhead to a machine (LP+)"	—	

Tbl-5: Assembly sequence

The bolts for mounting are not included in the delivery and need to be provided by the customer. Information can be found in the individual assembly steps.

NOTICE

Pressurized air can damage the gearhead seals.

- Do not use pressurized air to clean the gearhead.

- Clean/de-grease the following components with a clean and lint-free cloth and grease-dissolving, non-aggressive detergent:
  - All fitting surfaces to neighboring components
  - Centering
  - The motor shaft
  - The inner diameter of the plug receptacle
  - The bushing inside and out
- Check the fitting surfaces additionally for damage and impurities.

5.2 Mounting the gearhead to a machine (LPB+)

	● Observe the safety and processing instructions of the cleaning agents and screw-bonding agents to be used.

There are two centering mechanisms for assembling the gearhead to the machine:

		centering
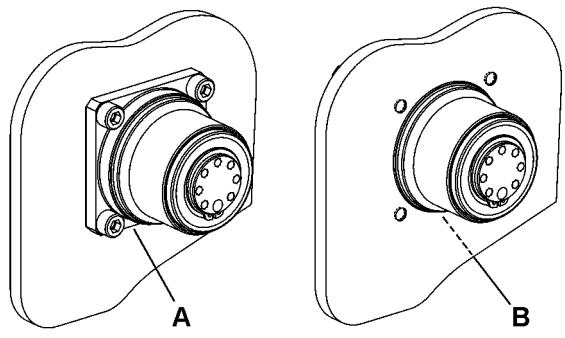	A	motor side
	B	gear output side

Tbl-6: Centering mechanisms

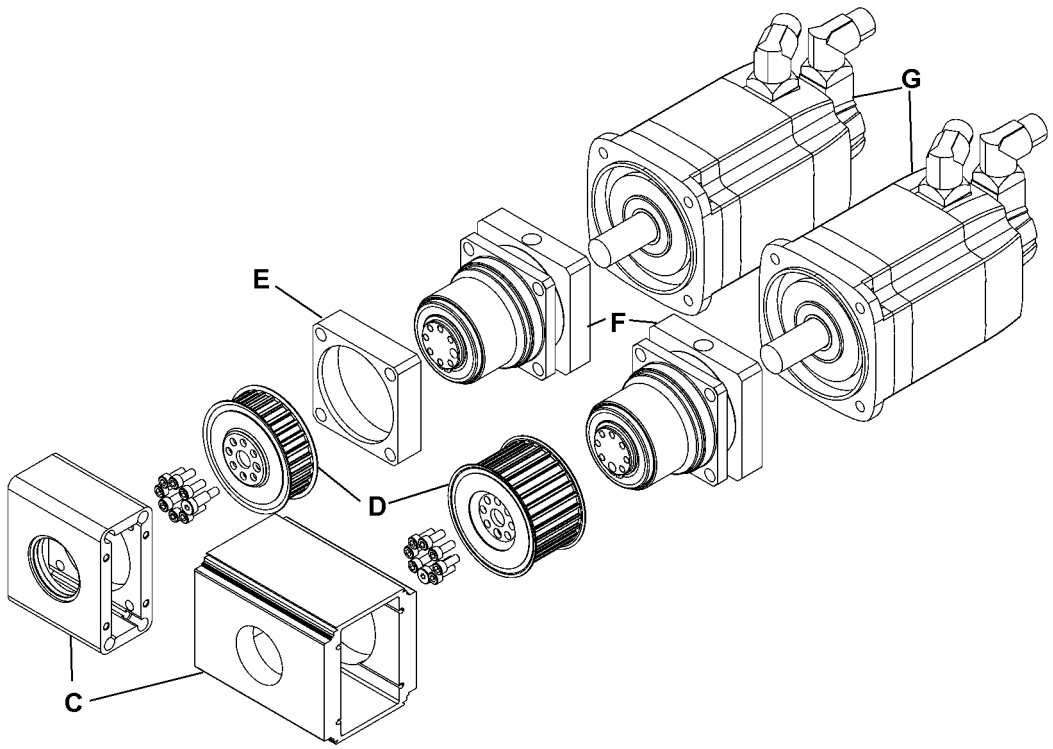

ⓘ If necessary, a spacer (E) may need to be placed between the gear reducer and your machine to position the gear reducer precisely. Such a spacer is **not** part of the drive's delivery and needs to be provided by the customer.

- Thoroughly clean the output flange, centering, fitting surface, spacer and toothed belt pulley. The anti-corrosion agent on the toothed belt pulley must be removed.

  ⓘ To remove the Aceton or Loctite 7063 anti-corrosion agent, use a clean, lint-free cloth.

- Also clean the browned toothed belt pulley with a brush and remove any salt residue between the flanged wheel and toothed belt wheel.

The fastening screws need to be provided by the customer.

ⓘ You can find the prescribed screw sizes and tightening torques in Chapter 9.2 "Specifications on mounting onto a machine", table "Tbl-17".

ⓘ When using hollow profiles (C): Position the toothed belt pulley (D) in the hollow profile before you attach the gearhead.

- Smear screw-bonding agent (for example Loctite 243) onto the fastening bolts.
- Fasten the gearhead to the machine with the fastening screws through the through-holes.

ⓘ Mount the gearhead in such a way that the type plate remains legible, if possible.

ⓘ Do not use washers (e.g. plain washers, tooth lock washers).

5.3 Mounting the motor onto the gearhead (LP+/ LPB+)

The standard delivery of a gearhead does not have a motor. The motor to be mounted has to:

- correspond to the B5 design
- have a radial and axial runout tolerance of ”N” according to DIN 42955 and
- if possible, have a smooth shaft.

ⓘ If a motor is included in the delivery, then it is:

- already firmly mounted on the LP+ (no assembly necessary).
- only mounted hand-tight on the LPB+ (assembly necessary).

5.3.1 Pre-mounting adapter plate (only LPB+)

The following information is valid for only the LPB+. On the LP+, the adapter plate is already mounted.

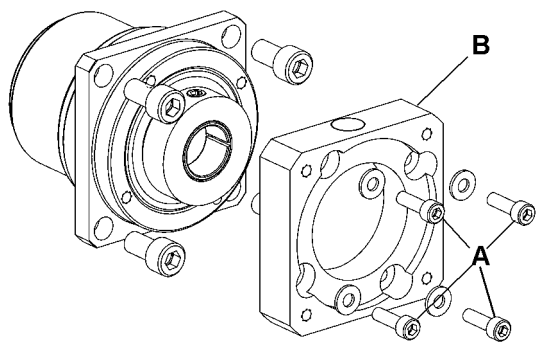

The adapter plate (B) along with the four fastening bolts (A) are included in the scope of delivery.

- Place the adapter plate onto the housing and hand-tighten the bolts at first.
- Tighten the bolts in diagonal order in at least two passes to the required tightening torque. See table "Tbl-7"

Gearhead size LPB+	Size	Tightening torque [Nm]
070	M4	2,64
090	M6	8,99
120	M6	8,99

Tbl-7: Fastening bolts adapter plate

5.3.2 Mounting the motor (LP+/ LPB+)

	● Observe the general information and safety instructions of the motor manufacturer. ● Observe the safety and processing instructions of the screw-bonding agents to be used.

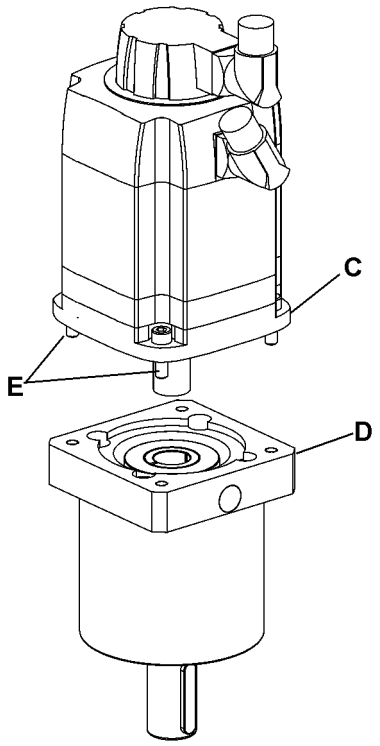

- Ensure that the motor is mounted if possible in a vertical direction.
- If the motor shaft has a shaft key, remove the shaft key.
  - ⓘ If recommended by the motor manufacturer, insert a half wedge.
- Turn the plug socket (A) so that the threaded pin (B) can be reached through the mounting holes.
- Push the motor shaft into the plug receptacle of the gearhead.
  - ⓘ The maximum permitted axial forces may not be exceeded, see Chapter 9.1 "Specifications on mounting onto a motor", table "Tbl-15". The motor shaft should slip in easily. If this is not the case, the threaded pin needs to be loosened more.
  - ⓘ The slit of the bushing has to line up with the groove (if existing) of the motor shaft and be turned by 90° to the threaded pin, see table "Tbl-8".
  - ⓘ No gap is permitted between motor (C) and the adapter plate (D).

		Designation
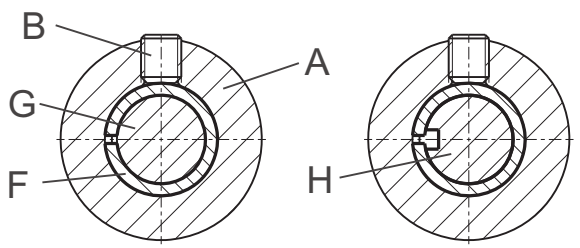	A	Plug receptacle
	B	Threaded pin
	F	Bushing
	G	Smooth shaft
	H	Keyed shaft

Tbl-8: Arrangement of motor shaft, plug receptacle and bushing

- Smear screw-bonding agent (for example Loctite 243) onto the four bolts (E).
- Fasten the motor (C) onto the adapter plate (D) with the four screws (E).
- Tighten the threaded pin (B) of the plug receptacle (A).
  - ⓘ For bolt sizes and specified torques refer to chapter 9.1 "Specifications on mounting onto a motor", tables "Tbl-15".
- Press the enclosed stopper plugs up to their stop in the mounting bores of the adapter plate (D).

5.4 Mounted components on the gear output side

NOTICE

Distortions during mounting operations can damage the gearhead.

- Mount gearwheels and toothed belt pulleys onto the output shaft without forcing.
- Do not on any account attempt an assembly by force or hammering!
- Only use suitable tools and equipment for assembly.
- If you pull on or shrink-fit a gear wheel onto the output shaft, you must make sure that the maximum permitted static axial forces of the output bearing (see table "Tbl-9") are not exceeded.

Size LP+ / LPB+	050	070	090	120	155
$F_{a\ max}$[N]	1800	4300	5100	11300	18500

Tbl-9: Maximum permitted static axial forces at static bearing statistic (s0) = 1.8 and radial force (Fr) = 0

5.4.1 Mountings on the output flange (LPB+)

- Observe the safety and processing instructions of the cleaning agents and screw-bonding agents to be used.

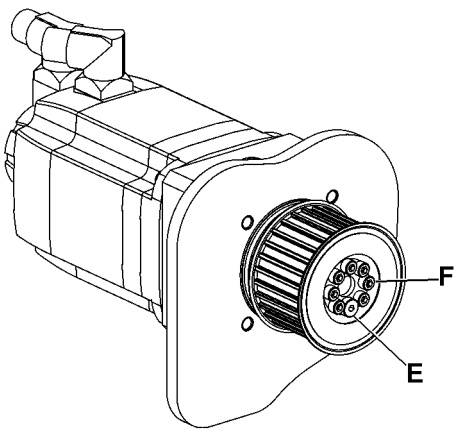

Only the version LPB+ features an output flange on which a toothed belt pulley can be mounted with the bolts.

- Thoroughly clean the output flange, centering, fitting surface and toothed belt pulley. The anti-corrosion agent on the toothed belt pulley must be removed.
  - ⓘ To remove the Aceton or Loctite 7063 anti-corrosion agent, use a clean, lint-free cloth.
- Also clean the browned toothed belt pulley with a brush and remove any salt residue between the flanged wheel and toothed belt wheel.
- Place the toothed belt pulley onto the output flange.
- Brush the screws with a screw-bonding agent (such as Loctite 243) and tighten the screws by hand initially.
- Tighten the fastening bolts (F) and the close-tolerance bolt (E) (1 piece) in diagonal order making at least two passes to the required tightening torque (see table "Tbl-10").

Gearhead size LPB+	Close-tolerance bolt		Fastening bolts	
	Thread x depth [mm] x [mm]	Tightening torque [Nm] (Property class 10.9)	Quantity x Thread x Depth [] x [mm] x [mm]	Tightening torque [Nm] (Property class 12.9)
070	M5 x 12	7,69	5 x M5 x 12	9
090	M6 x 16	13,2	7 x M6 x 16	15,4
120	M6 x 16	13,2	7 x M8 x 20	37,3

Tbl-10: Fastening the toothed belt pulley

The tension of the tooth belt is brought about by its construction. The toothed belt's prestressing force influences the ball bearing life of the gearhead.

- You can determine the theoretical bearing life for each case using our analysis software **cymex®**.
- Set your toothed belt so that there are no lateral starting loads pressing on the toothed belt pulley.

5.5 Mounting the gearhead to a machine (LP+)

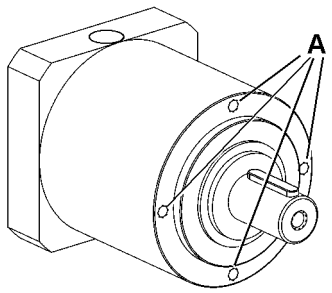

Four threaded bores are available in the gear unit housing for bolting it to your machine.

- Thoroughly clean the output shaft, centering, and fitting surface.

The bolts need to be provided by the customer. You can find the prescribed screw sizes and tightening torques in Chapter 9.2 "Specifications on mounting onto a machine", table "Tbl-16".

- Smear screw-bonding agent (for example Loctite 243) onto the four bolts.
- Fasten the gearhead on the machine with the fastening bolt through the holes.
  - ⓘ Mount the gearhead in such a way that the type plate remains legible.
  - ⓘ Do not use washers (e.g. plain washers, tooth lock washers).

6 Startup and operation

- Be informed of the general safety instructions before beginning work. (see Chapter 2.7 "General safety instructions").

	Improper use can cause damage to the gearhead. ● Make sure that - the **ambient temperature** does not drop below –15 °C or exceed +40 °C and - the **operating temperature** does not exceed +90 °C. ● Avoid icing, which can damage the seals. ● For other conditions of use, please consult our Customer Service Department. ● Only use the gearhead only up to its maximum limit values, see Chapter 3.4 "Performance statistics". ● Only use the gearhead only in a clean, dust-free and dry environment.

7 Maintenance and disposal

- Be informed of the general safety instructions before beginning work. (see Chapter 2.7 "General safety instructions").

7.1 Maintenance work

7.1.1 Visual inspection

- Check the entire gearhead for exterior damage.
- The radial shaft seals are subject to wear. Therefore also check the gearhead for leakage during each visual inspection.
  - ⓘ You can find more general information on radial shaft seals on our partner's Internet site at http://www.simrit.de.
  - ⓘ Check the mounting position, so that no foreign medium (e.g. oil) has collected on the output shaft.

7.1.2 Checking the tightening torques

- Check the tightening torque of the fastening bolts on the gearhead housing. For LPB+ gearheads, also check the fastening bolts on the toothed belt pulley.
  - ⓘ You can find the prescribed tightening torques in Chapter 9.2 "Specifications on mounting onto a machine", tables "Tbl-16" and "Tbl-17" as well as in Chapter 5.4.1 "Mountings on the output flange (LPB+)", table "Tbl-10".
- Check the tightening torque of the threaded pin on the motor mounting.
  - ⓘ You can find the prescribed tightening torques in chapter 9.1 "Specifications on mounting onto a motor", table "Tbl-15".

7.2 Startup after maintenance work

- Clean the outside of the gearhead.
- Attach all safety devices.
- Do a trial run before releasing the gearhead again for operation.

7.3 Maintenance schedule

Maintenance work	At startup	First time after 500 operating hours or 3 months	Every 3 months	Yearly
Visual inspection	X	X	X	
Checking the tightening torques	X	X		X

Tbl-11: Maintenance schedule

7.4 Notes on the lubricant used

All gearheads are lubricated for their service life by the manufacturer with a mineral oil-based lithium soap grease or with a food-safe synthetic grease (carbon hydride oil, aluminum complex soap) (see type plate). All bearings are permanently lubricated by the company.

You can receive further information on the lubricants directly from the manufacturer:

Standard lubricants	Lubricants for the food industry (USDA-H1 registered)
Castrol Industrie GmbH, Mönchengladbach Tel.: + 49 2161 909-30 www.castrol.com	Klüber Lubrication München KG, Munich Tel.: + 49 89 7876–0 www.klueber.com

Tbl-12: Lubricant manufacturers

7.5 Disposal

Consult our Customer Service Department for supplementary information on exchanging the adapter plate, on disassembly, and on disposal of the gearhead.

- Dispose of the gearhead at the recycling sites intended for this purpose.
  ⓘ Observe the locally valid regulations for disposals.

8 Malfunctions

NOTICE

Changed operational behavior can be an indication of existing damage to the gearhead or cause damage to the gearhead.

- Do not put the gearhead back into operation until the cause of the malfunction has been rectified.

Rectifying of malfunctions may be done by only by especially trained technicians.

Fault	Possible cause	Solution
Increased operating temperature	The gearhead is not suited for the task.	Check the technical specifications.
	Motor is heating the gearhead.	Check the wiring of the motor.
		Ensure adequate cooling.
		Change the motor.
	Ambient temperature too high.	Ensure adequate cooling.
Increased noises during operation	Distortion in motor mounting	Please consult our Customer Service Department.
	Damaged bearings	
	Damaged gear teeth	
Loss of lubricant	Lubricant quantity too high	Wipe off discharged lubricant and continue to watch the gearhead. Lubricant discharge must stop after a short time.
	Seals not tight	Please consult our Customer Service Department.

Tbl-13: Malfunctions

9 Appendix

9.1 Specifications on mounting onto a motor

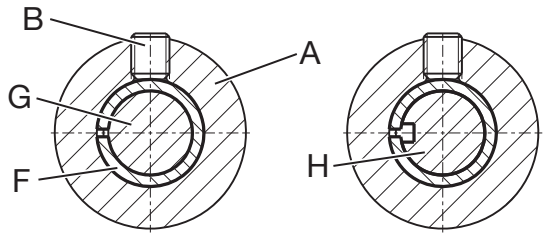

	Designation
A	Plug receptacle
B	Threaded pin
F	Bushing
G	Smooth shaft
H	Keyed shaft

Tbl-14: Arrangement of motor shaft, plug receptacle and bushing

Gearhead size LP+ / LPB+	Clamping hub interior Ø [mm]	Width across flats, threaded pin (B) [mm]	Tightening torque [Nm]	Max. axial force [N]
050	11	3	5.6	45
070	16	4	14	80
090	24	5	23	100
120	32	6	45	150
155, 1–stage	42	8	78	180
155, 2–stage	32	6	45	150

Tbl-15: Specifications on mounting onto a motor

9.2 Specifications on mounting onto a machine

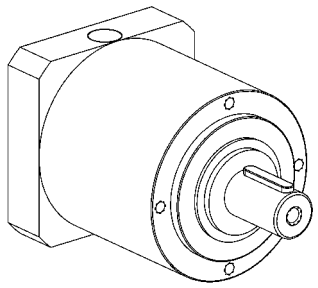

Size LP+	Bore Ø [mm]	Bolt size / property class	Tightening torque [Nm]
050	44	M4 / 12.9	4.55
070	62	M5 / 12.9	9.0
090	80	M6 / 12.9	15.4
120	108	M8 / 12.9	37.3
155	140	M10 / 12.9	73.4

Tbl-16: Threaded bores in the gearhead housing LP+

	Gearhead size LPB+	Bore Ø [mm]	Bolt size / property class	Tightening torque [Nm]
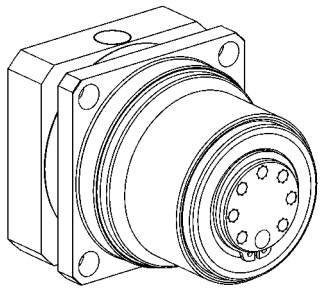	**070**	82	M8 / 12.9	37.3
	090	106	M10 / 12.9	73.4
	120	144	M12 / 12.9	126

Tbl-17: Through-holes in gearhead housing LPB+

9.3 Tightening torques for common thread sizes in general mechanics

The specified tightening torques for headless screws and nuts are calculated values and are based on the following conditions:

- Calculation acc. VDI 2230 (Issue February 2003)
- Friction value for thread and contact surfaces μ=0.10
- Exploitation of the yield stress 90 %

	Tightening torque [Nm] for threads												
Property class Bolt / nut	**M3**	**M4**	**M5**	**M6**	**M8**	**M10**	**M12**	**M14**	**M16**	**M18**	**M20**	**M22**	**M24**
8.8 / 8	1.15	2.64	5.24	8.99	21.7	42.7	73.5	118	180	258	363	493	625
10.9 / 10	1.68	3.88	7.69	13.2	31.9	62.7	108	173	265	368	516	702	890
12.9 / 12	1.97	4.55	9.00	15.4	37.3	73.4	126	203	310	431	604	821	1042

Tbl-18: Tightening torques for headless screws and nuts

WITTENSTEIN alpha GmbH
Walter-Wittenstein-Straße 1
97999 Igersheim

WITTENSTEIN - being one with the future

www.wittenstein.de