WITTENSTEIN alpha

TP+

Operating Manual

2022-D033543

Revision: 02

Revision history

Revision	Date	Comment	Chapter
01	07.05.09	New version	All
02	01.08.09	Machinery Directive	1, 2, 3, 4, 6

Service

In case you have technical questions,
please contact:

WITTENSTEIN alpha GmbH

Customer Service
Walter-Wittenstein-Straße 1
D-97999 Igersheim

Tel.: +49 7931 493-10900

Fax: +49 7931 493-10903

E-mail: service-alpha@wittenstein.de

© **WITTENSTEIN alpha GmbH 2009**

This documentation is copyright protected.

WITTENSTEIN alpha GmbH reserves all the rights to photo-mechanical reproduction, copying, and the distribution by special processes (such as computers, file media, data networks), even in parts.

Subject to technical and content changes without notice.

Contents

1 On this manual 2
1.1 Signal words 2
1.2 Safety symbols 2
1.3 Design of the safety instructions 3
1.4 Information symbols 3
2 Safety 4
2.1 EC – Machinery Directive 4
2.2 Dangers 4
2.3 Personnel 4
2.4 Intended use 4
2.5 Reasonably predictable misuse 4
2.6 Guarantee and liability 4
2.7 General safety instructions 5
3 Description of the gearhead 6
3.1 Overview of the gearhead components 6
3.2 Type plate 7
3.3 Ordering code 7
3.4 Performance statistics 8
3.5 Weight 8
3.6 Noise emission 8
4 Transport and storage 9
4.1 Scope of delivery 9
4.2 Packaging 9
4.3 Transport 9
4.4 Storage 9
5 Assembly 10
5.1 Preparations 10
5.2 Mounting the motor onto the gearhead 11
5.3 Mounting the gearhead to a machine 12
5.4 Mounted components on the gear output side 12
6 Startup and operation 13
7 Maintenance and disposal 14
7.1 Maintenance work 14
7.1.1 Visual inspection 14
7.1.2 Checking the tightening torques 14
7.2 Startup after maintenance work 14
7.3 Maintenance schedule 14
7.4 Notes on the lubricant used 15
7.5 Supplementary information 15
8 Malfunctions 16
9 Appendix 17
9.1 Specifications on mounting onto a motor 17
9.1.1 Specifications for the “M” version 17
9.1.2 Specifications for the “MA” version 18
9.2 Specifications on mounting on the gear output side 19
9.3 Specifications on mounting onto a machine 19
9.4 Tightening torques for common thread sizes in general mechanics 20

1 On this manual

These instructions contain necessary information for the safe operation of the planetary gearhead TP+, referred to as gearhead in the following.

The operator must make sure that this operating manual is read through by all persons assigned to install, operate, or maintain the gearhead, and that they understand them.

Store these instructions within reach near the gearhead.

Please pass the safety instructions on to other persons as well.

The original instructions were prepared in German; all other language versions are translations of these instructions.

1.1 Signal words

The following signal words are used to bring your attention to dangers, prohibitions, and important information:

	⚠ DANGER
	This signal word points out to an imminent danger that can cause serious injuries and even death.
	⚠ WARNING
	This signal word points out to a possible danger that can cause serious injuries and even death.
	⚠ CAUTION
	This signal word points out to a possible danger that can cause slight to serious injuries.
	NOTICE
	This signal word points out to a possible danger that can cause material damage.
	A note without signal word draws your attention to application tips or especially important information when handling the gearhead.

1.2 Safety symbols

The following safety symbols are used to bring your attention to dangers, prohibitions, and important information:

General danger

Hot surface

Suspended loads

Danger of being pulled in

Environment protection

Information

1.3 Design of the safety instructions

The safety instructions of this operating manual is designed according to the following pattern:

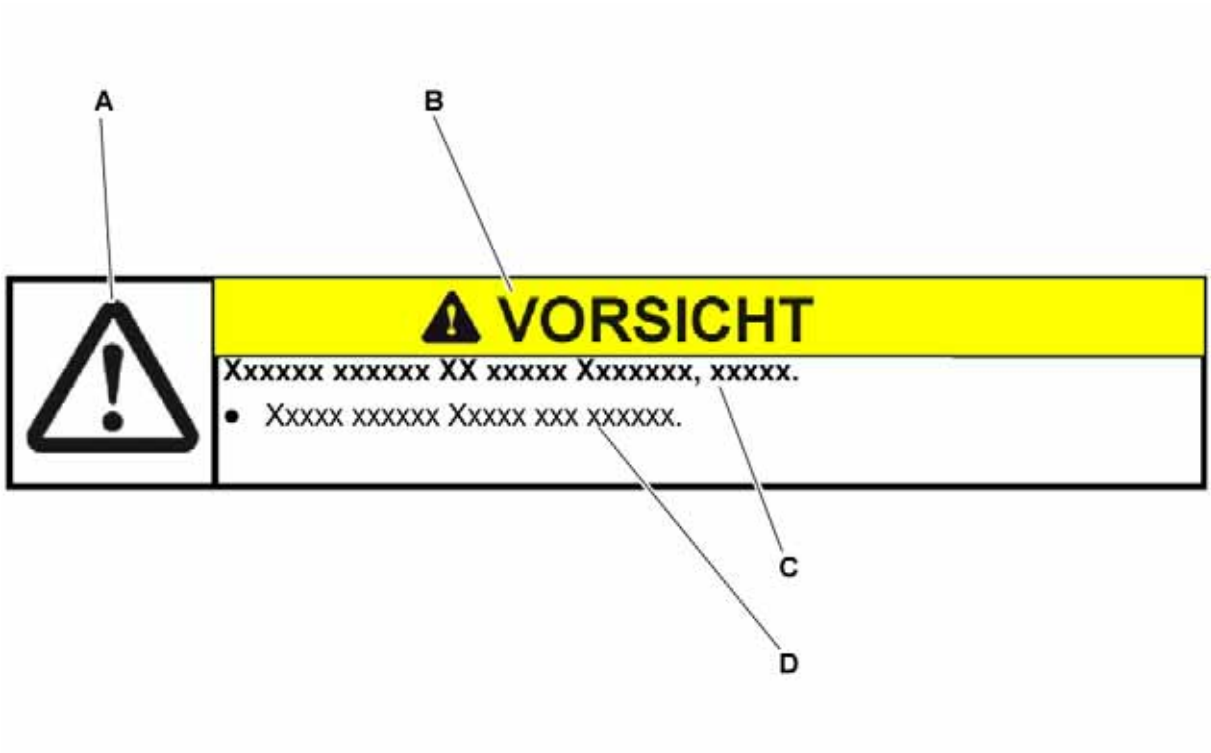

A = Safety symbol (see Chapter 1.2 "Safety symbols")
B = Signal word (see Chapter 1.1 "Signal words")
C = Type and consequence of the danger
D = Prevention of the danger

1.4 Information symbols

The following information symbols are used:

- requires you to carry out an action
  - ➲ indicates the results of an action

ⓘ provides additional information on handling

2 Safety

These instructions, especially the safety instructions and the rules and regulations valid for the operating site, must be observed by all persons working with the gearhead.

In addition to the safety specifications mentioned in this operating manual, the general and also the local regulations on the prevention of accidents (for instance, personal safety equipment) and on environmental protection should be observed.

2.1 EC – Machinery Directive

The gearhead is considered a "machine component" and is therefore not subject to the EC Machinery Directive 2006/42/EC.

Operation is prohibited within the area of validity of the EC directive until it has been determined that the machine in which this gearhead is installed corresponds to the regulations within this directive.

2.2 Dangers

The gearhead has been constructed according to current technological standards and accepted safety regulations.

To avoid danger to the operator or damage to the machine, the gearhead may be put to use only for its intended usage (see chapter 2.4 "Intended use") and in a technically flawless and safe state.

2.3 Personnel

Only persons who have read and understood these disassembly instructions may carry out work on the gearhead.

2.4 Intended use

The gearhead serves to convert torques and speeds. It is built for industrial applications that do not fall under article 2 of the directive 2002/95/EU (usage restriction of certain dangerous materials on electro and electronic equipment).

The gearhead is specified for installment on motors that:

- correspond to the design B5 (for any divergences, please consult our Customer Service Department [Technical Customer Service]).
- show a radial and axial runout tolerance of at least “N” according to DIN 42955 and
- have a smooth shaft.

2.5 Reasonably predictable misuse

Any usage that exceeds the maximum permitted speeds, torques and temperature is considered a misuse and is therefore prohibited.

2.6 Guarantee and liability

Guarantee and liability claims are excluded for personal injury and material damage in case of

- Ignoring the information on transport and storage
- Improper use (misuse)
- Improper or neglected maintenance and repair
- Improper assembly / disassembly or improper operation
- Operation of the gearhead when safety devices and equipment are defective
- Operation of the gearhead without lubricant
- Operation of a heavily soiled gearhead
- Modifications or reconstructions that have been carried out without the approval of **WITTENSTEIN alpha GmbH**

2.7 General safety instructions

⚠ WARNING

Objects flung out by rotating components can cause serious injuries.

- Remove objects and tools from the gearhead before putting it into operation.

⚠ WARNING

Rotating components on the gearhead can pull in parts of the body and cause serious injuries and even death.

- Keep a sufficient distance to rotating machinery while the gearhead is running.
- Secure the machine against restarting and unintentional movements during assembly maintenance work.

⚠ CAUTION

Hot gearhead housing can cause serious burns.

- Touch the gearhead housing only when wearing protective gloves or after the gearhead has been at standstill for some time.

NOTICE

Loose or overloaded screw connections can damage the gearhead.

- Use a calibrated torque wrench to tighten and check all screw connections for which a tightening torque has been specified.

Solvents and lubricants can pollute soil and water.

- Use and dispose of cleaning solvents as well as lubricants appropriately.

3 Description of the gearhead

The gearhead is a single- or multistage, low-backlash planetary gearhead, which is manufactured as standard in the following versions:

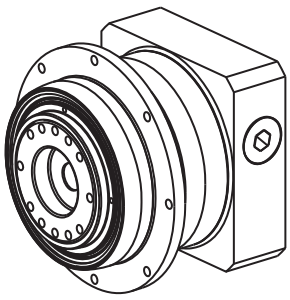	**"M" (motor-mounted gear reducer)** Motor centering of the motor-mounted gear reducer is performed: - up to gearhead size TP+ 025 and a motor shaft diameter of 28 mm of by the clamping hub (plug receptacle or coupling) - from gearhead size TP+ 050 and a motor shaft diameter of >28 mm through the centering collar of the motor A radial distortion of the motor is avoided. Adaptation to various motors is done by an adaptor plate and a spacer sleeve. The output flange bearing is designed to withstand high overturning torques and axial forces. The gearhead can be optionally constructed with a coupling to compensate for thermal linear expansion.
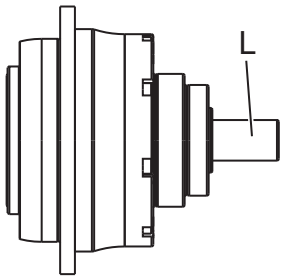	**"S" (self-contained gear reducer)** The self-contained gear reducer is based on the motor-mounted gear reducer and additional mounting parts, such as drive housing and drive shaft (L). It is possible to drive the gear reducer directly at the drive shaft, for instance, using a belt pulley. The drive shaft bearing and output flange bearing is designed to withstand high overturning torques and axial forces.

3.1 Overview of the gearhead components

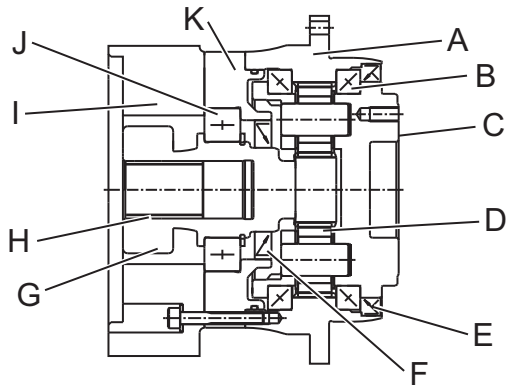

	Gearhead components
A	Gearhead housing
B	Output bearing
C	Output flange
D	Planetary gear stage
E	Radial shaft sealing ring
F	Radial shaft sealing ring
G	Clamping hub (plug receptacle / coupling)
H	Spacer sleeve
I	Adaptor plate
J	Drive bearing arrangement
K	Drive housing

Tbl-1: Overview of the gearhead components

3.2 Type plate

The type plate is attached to the gearhead housing.

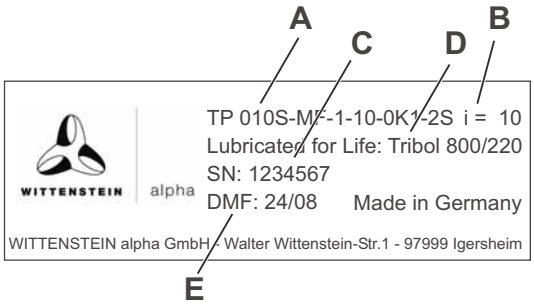

	Designation
A	Ordering key (see Chapter 3.3 "Ordering code")
B	Ratio
C	Serial number
D	Lubricant
E	Production date

Tbl-2: Type plate (sample values)

3.3 Ordering code

TP 010 S-M F 1-10-0 K 1-2 S

Gearhead type
TP+ 004/010/025/050/110/
300/500

Type code
A = Mass inertia optimized version
F = Food lubrication
G = Grease
S = Standard
X = Special gear

Gearhead variations
M = Motor attachment gearhead
S = Self-Contained version

Gearhead model
A = High Torque®
F = Cyclic duty S5

Number of stages
1 = 1-stage
2 = 2-stage
3 = 3-stage

Motor-mounted
K = Coupling
S = Plug receptacle

Generation

Backlash
0 = Reduced
1 = Standard

Clamping hub bore hole diameter
See catalogue

Shape of output shaft
0 = Standard
3 = System output
4 = Customsized

Ratios i

3.4 Performance statistics

Please refer to our catalogue or our Internet page for the maximum permitted speeds and torques: http://www.wittenstein-alpha.de

Please consult our service department if your gearhead is older than a year. You will then receive the valid performance data.

3.5 Weight

The table "Tbl-3" specifies the gearhead dimensions with medium-sized adaptor plate. If another adaptor plate is mounted, the actual dimensions can deviate by up to 10%.

Gearhead size TP+		004	010	025	050	110	300	500
Design	**Stages**							
M	**1**	1.4	3.8	6.5	14.0	30.0	60.0	82.0
	2	1.5	3.6	6.7	14.1	34.0	58.5	77.5
MA	**1**	-	-	-	-	-	55.0	80.0
	2	-	3.2	5.6	12.5	33.1	64.0	80.0
	3	-	3.6	6.1	13.4	35.4	67.0	89.0
S		on demand						

Tbl-3: Weight [kg]

3.6 Noise emission

Depending on the gearhead type and product size, the continuous sound pressure level is between 70 and 75 dB(A).

Please contact our Customer Service Department if you need information regarding your particular product.

4 Transport and storage

4.1 Scope of delivery

- Check the completeness of the delivery against the delivery note.

  ⓘ Missing parts or damage must be notified immediately in writing to the carrier, the insurance, or **WITTENSTEIN alpha GmbH**.

4.2 Packaging

The gearhead is delivered packed in foil and cardboard boxes.

- Dispose of the packaging materials at recycling sites intended for that. Observe the locally valid regulations for disposals.

4.3 Transport

NOTICE

Hard knocks, for instance because of falling or hard dropping, can damage the gearhead.

- Only use hoisting equipment and transports with sufficient capacity.
- The maximum permitted lift capacity of a hoist may not be exceeded.
- Lower the gearhead slowly.

⚠ WARNING

Suspended loads can fall and can cause serious injuries and even death.

- Do not stand under suspended loads.

No special transport mode is prescribed for transporting the gearhead.

Specifications on the weights, refer to Chapter 3.5 "Weight".

4.4 Storage

Store the gearhead in horizontal position and dry surroundings at a temperature of 0 °C to + 40 °C in the original packaging. Store the gearhead for a maximum of 2 years.

For storage logistics, we recommend the "first in – first out" method.

5 Assembly

- Before you begin working, inform yourself of the general safety instructions (see Chapter 2.7 "General safety instructions").

5.1 Preparations

NOTICE

Pressurized air can damage the gearhead seals.

- Do not use pressurized air to clean the gearhead.

NOTICE

Directly sprayed cleaning agents can alter the frictional values of the clamping hub.

- Only spray cleaning agents onto a cloth, with which you can then clean the clamping hub.

- Clean / De-grease the following components with a clean and lint-free cloth and grease-dissolving, non-aggressive detergent:
  - All fitting surfaces to neighboring components
  - Centering
  - The motor shaft
  - The inside diameter of the clamping hub
  - The spacer sleeve inside and out
- Dry all fitting surfaces to neighboring components in order to achieve the proper friction values of the screw connections.
- Check the fitting surfaces additionally for damage and impurities.

5.2 Mounting the motor onto the gearhead

	● Observe the general information and safety instructions of the motor manufacturer. ● Observe the safety and processing instructions of the screw-bonding agents to be used.

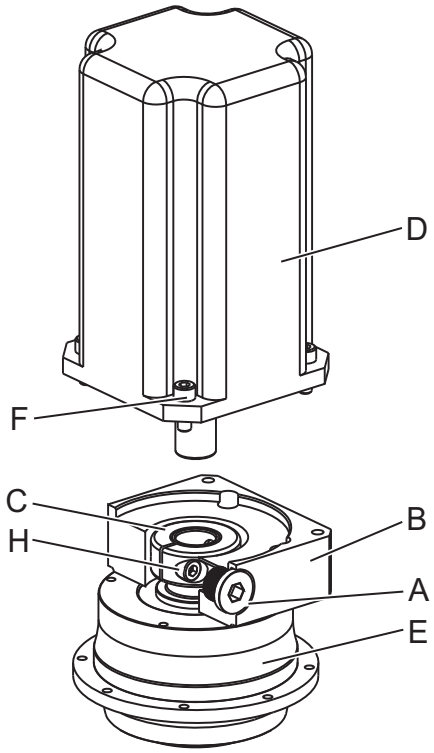

- If the motor shaft has a shaft key, remove the shaft key.
  - ⓘ If recommended by the motor manufacturer, insert a half wedge.
- Turn the clamping hub (C) until the clamping bolt (H) can be reached by the mounting bore.
- Loosen the clamping bolt (H) of the clamping hub (C) by one revolution.
- Push the motor shaft into the clamping hub of the gearhead (E).
  - ⓘ The motor shaft should slip in easily. If this is not the case, the clamping bolt must be loosened more.
  - ⓘ A slotted spacer sleeve has to be installed extra for certain motor shaft diameters and applications.
  - ⓘ The slot of the spacer sleeve (if provided) and clamping hub have to be flush with the groove (if provided) of the motor shaft, see table "Tbl-4".
  - ⓘ No gap is permitted between motor (D) and the adaptor plate (B).

		Designation
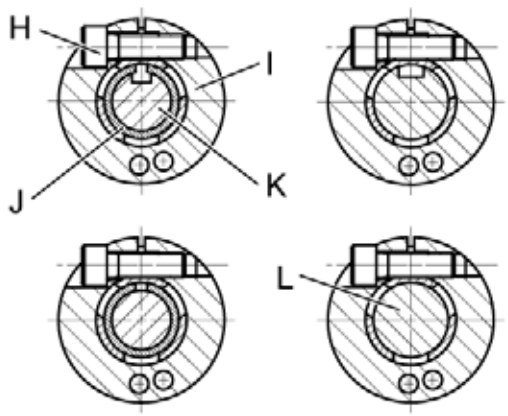	H	Clamping bolt
	I	Steel/aluminum clamping ring [part of the clamping hub (C)]
	J	Spacer sleeve
	K	Grooved shaft
	L	Smooth shaft

Tbl-4: Arrangement of motor shaft, clamping hub, and spacer sleeve

- Smear screw-bonding agent (for example Loctite 243) onto the four bolts (F).
- Fasten the motor (D) onto the adaptor plate (B) with the four screws.

- Select the tightening torque for the clamping bolt (H) according to the material of the clamping ring (I).
  - Clamping bolt for **steel** clamping ring: Property class 12.9
  - Clamping bolt for **aluminum** clamping ring: Property class 8.8

  ⓘ For bolt sizes and specified torques refer to chapter 9.1 "Specifications on mounting onto a motor", tables "Tbl-10" and "Tbl-11".
- Tighten the clamping bolt (H) of the clamping hub (C).
- Screw in plug (A) of the adaptor plate (B).

  ⓘ For screw sizes and specified torques refer to table "Tbl-5".

Width across flats [mm]	5	8	10	12	14
Tightening torque [Nm]	10	35	50	70	140

Tbl-5: Torques for the plugs

5.3 Mounting the gearhead to a machine

- Observe the safety and processing instructions of the screw-bonding agents to be used.

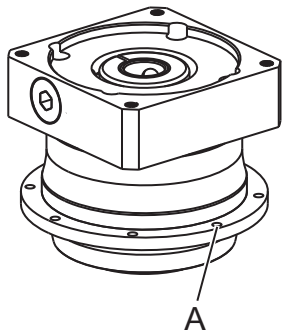

- Center the gearhead in the machine bed.
- Smear a screw-bonding agent (for example Loctite 243) onto the fastening screws.
- Fasten the gearhead on the machine with the fastening screws through the through-holes (A).

  ⓘ Mount the gearhead in such a way that the type plate remains legible.

  ⓘ Do not use washers (e.g. plain washers, tooth lock washers).

  ⓘ For prescribed screw sizes and torques refer to Chapter 9.3 "Specifications on mounting onto a machine", table "Tbl-13".

5.4 Mounted components on the gear output side

NOTICE

Distortions during mounting operations can damage the gearhead.

- Mount gearwheels and toothed belt pulleys onto the output flange without forcing.
- Do not on any account attempt an assembly by force or hammering!
- Only use suitable tools and equipment for assembly.

ⓘ For prescribed screw sizes and torques refer to Chapter 9.2 "Specifications on mounting on the gear output side", table "Tbl-12".

6 Startup and operation

- Before you begin working, inform yourself of the general safety instructions (see Chapter 2.7 "General safety instructions").

	Improper use can cause damage to the gearhead. ● Make sure that - the **ambient temperature** does not drop below -15 °C or exceed +40 °C and - the **operating temperature** does not exceed +90 °C. ● Avoid icing, which can damage the seals. ● For other conditions of use, please consult our Customer Service Department. ● Only use the gearhead only up to its maximum limit values, see Chapter 3.4 "Performance statistics". ● Only use the gearhead only in a clean, dust-free and dry environment.

7 Maintenance and disposal

- Before you begin working, inform yourself of the general safety instructions (see Chapter 2.7 "General safety instructions").

7.1 Maintenance work

7.1.1 Visual inspection

- Check the entire gearhead for exterior damage.
- The radial shaft seals are subject to wear. Therefore also check the gearhead for leakage during each visual inspection.
  - ⓘ You can find more general information on radial shaft seals on our partner's Internet site at http://www.simrit.de.
  - ⓘ Check the mounting position, so that no foreign medium (e.g. oil) has collected on the output flange.

7.1.2 Checking the tightening torques

- Check the tightening torque of the fastening bolts on the gearhead housing and at the output flange.
  - ⓘ You can find the prescribed tightening torques in Chapter 9.3 "Specifications on mounting onto a machine", table "Tbl-13" and in Chapter 9.2 "Specifications on mounting on the gear output side", table "Tbl-12".
- Check the tightening torque of the clamping bolt on the motor mounting.
  - ⓘ You can find the prescribed tightening torques in Chapter 9.1 "Specifications on mounting onto a motor", tables "Tbl-10" and "Tbl-11".

7.2 Startup after maintenance work

- Clean the outside of the gearhead.
- Attach all safety devices.
- Do a trial run before releasing the gearhead again for operation.

7.3 Maintenance schedule

Maintenance work	At startup	First time after 500 operating hours or 3 months	Every 3 months	Yearly
Visual inspection	X	X	X	
Checking the tightening torques	X	X		X

Tbl-6: Maintenance schedule

7.4 Notes on the lubricant used

All gearheads are permanently lubricated by the manufacturer with synthetic gear oil (polyglycols) of viscosity class ISO VG100, ISO VG220 or with a high-performance lubricant (see type plate). All bearings are permanently lubricated by the company.

You can receive further information on the lubricants directly from the manufacturer:

Standard lubricants	Lubricants for the food industry (NSF-H1 registered)
Castrol Industrie GmbH, Mönchengladbach Tel.: + 49 2161 909-30 www.castrol.com	Klüber Lubrication München KG, Munich Tel.: + 49 89 7876–0 www.klueber.com

Tbl-7: Lubricant manufacturers

7.5 Supplementary information

Consult our Customer Service Department for supplementary information on exchanging the adapter plate, on disassembly, and on disposal of the gearhead.

- Dispose of the gearhead at the recycling sites intended for this purpose.
  ⓘ Observe the locally valid regulations for disposals.

8 Malfunctions

NOTICE

Changed operational behavior can be an indication of existing damage to the gearhead or cause damage to the gearhead.

- Do not put the gearhead back into operation until the cause of the malfunction has been rectified.

Rectifying of malfunctions may be done by only by especially trained technicians.

Fault	Possible cause	Solution
Increased operating temperature	The gearhead is not suited for the task.	Check the technical specifications.
	Motor is heating the gearhead.	Check the wiring of the motor.
		Ensure adequate cooling.
		Change the motor.
	Ambient temperature too high.	Ensure adequate cooling.
Increased noises during operation	Distortion in motor mounting	Please consult our Customer Service Department.
	Damaged bearings	
	Damaged gear teeth	
Loss of lubricant	Lubricant quantity too high	Wipe off discharged lubricant and continue to watch the gearhead. Lubricant discharge must stop after a short time.
	Seals not tight	Please consult our Customer Service Department.

Tbl-8: Malfunctions

9 Appendix

9.1 Specifications on mounting onto a motor

		Designation
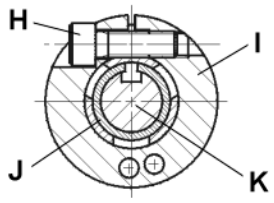	H	Clamping bolt
	I	Steel/aluminum clamping ring (part of the clamping hub)
	J	Spacer sleeve
	K	Shaft

Tbl-9: Arrangement of motor shaft, clamping hub, and spacer sleeve

9.1.1 Specifications for the “M” version

Gearhead size TP+		Clamping hub interior Ø “x” [mm]	Clamping screw (H) / DIN ISO 4762	Width across flats [mm]	Tightening torque [Nm] property class 12.9 (8.8)	max. axial force clamping hub [N]	
						Plug receptacle	Coupling
004	1-stage	x≤11	M4	3	4.1 (2.8)	100	10
		11< x ≤14	M5	4	9.5 (5.6)		
		14< x ≤19	M6	5	14 (9.5)		
	2-stage	x≤11	M4	3	4.1 (2.8)	80	—
		11< x ≤14	M5	4	9.5 (5.6)		
010	1-stage	x≤14	M5	4	9.5 (5.6)	120	20
		14< x ≤19	M6	5	14 (9.5)		
		19< x ≤24	M8	6	35 (23)		
	2-stage	x≤11	M4	3	4.1 (2.8)	100	10
		11< x ≤14	M5	4	9.5 (5.6)		
		14< x ≤19	M6	5	14 (9.5)		
025	1-stage	x≤19	M6	5	14 (9.5)	150	30
		19< x ≤24	M8	6	35 (23)		
		24< x ≤28	M6	5	14 (9.5)		
		28< x ≤38	M10	8	79 (45)		
	2-stage	x≤14	M5	4	9.5 (5.6)	120	20
		14< x ≤19	M6	5	14 (9.5)		
		19< x ≤24	M8	6	35 (23)		
050	1-stage	x≤24	M8	6	35 (23)	200	50
		24< x ≤38	M10	8	79 (45)		
		38< x ≤48	M12	10	135 (78)		
	2-stage	x≤19	M6	5	14 (9.5)	150	30
		19< x ≤24	M8	6	35 (23)		
		24< x ≤38	M10	8	79 (45)		

Gearhead size TP+		Clamping hub interior Ø "x" [mm]	Clamping screw (H) / DIN ISO 4762	Width across flats [mm]	Tightening torque [Nm] property class 12.9 (8.8)	max. axial force clamping hub [N]	
						Plug receptacle	Coupling
110	1-stage	x≤38 38< x ≤48	M10 M12	8 10	79 (45) 135 (78)	250	200
	2-stage	x≤24 24< x ≤38 38< x ≤48	M8 M10 M12	6 8 10	35 (23) 79 (45) 135 (78)	200	50
300	1-stage	x≤55	M12	10	135 (78)	300	—
	2-stage	x≤48	M12	10	135 (78)	250	—
500	1-stage	x≤60	M16	14	330 (195)	300	—
	2-stage	x≤48	M12	10	135 (78)	250	—

Tbl-10: Specifications on mounting onto a motor, version "M"

9.1.2 Specifications for the "MA" version

Gearhead size TP+		Clamping hub interior Ø "x" [mm]	Clamping screw (H) / DIN ISO 4762	Width across flats [mm]	Tightening torque [Nm] property class 12.9 (8.8)	max. axial force clamping hub [N]	
						Plug receptacle	Coupling
010	2-stage	x≤14 14< x ≤19	M5 M6	4 5	9.5 (5.6) 14 (9.5)	120	20
	3-stage	x≤14	M5	4	9.5 (5.6)	120	20
025	2-stage	x≤19 19< x ≤24	M6 M8	5 6	14 (9.5) 35 (23)	150	30
	3-stage	x≤19	M6	5	14 (9.5)	150	30
050	2-stage	x≤24 24< x ≤38	M8 M10	6 8	35 (23) 79 (45)	200	50
	3-stage	x≤24	M8	6	35 (23)	200	50
110	2-stage	x≤38 38< x ≤48	M10 M12	8 10	79 (45) 135 (78)	250	200
	3-stage	x≤38	M10	8	79 (45)	250	200
300	1-stage	x≤55	M12	10	135 (78)	300	—
	2-stage	x≤48	M12	10	135 (78)	250	—
	3-stage	x≤38	M10	8	79 (45)	250	—
500	1-stage	x≤60	M16	14	330 (195)	300	—
	2-stage	x≤48	M12	10	135 (78)	250	—
	3-stage	x≤38 38< x ≤48	M10 M12	8 10	79 (45) 135 (78)	250	—

Tbl-11: Specifications on mounting onto a motor, version "MA"

9.2 Specifications on mounting on the gear output side

Thread in output flange			
Size / Design TP+	**Hole circle Ø [mm]**	**Quantity x thread x depth [ ] x [mm] x [mm]**	**Tightening torque [Nm] Property class 12.9**
004 M / S	31.5	8 x M5 x 7	9
010 M / S	50	8 x M6 x 10	15.4
025 M / S	63	12 x M6 x 12	15.4
050 M / S	80	12 x M8 x 15	37.3
110 M / S	125	12 x M10 x 20	73.4
300 M / S	140	12 x M16 x 31	310
500 M / S	160	12 x M20 x 31	604
010 MA / SA	50	12 x M6 x 10	15.4
025 MA / SA	63	12 x M8 x 12	37.3
050 MA / SA	80	12 x M10 x 15	73.4
110 MA / SA	125	12 x M12 x 19	126
300 MA / SA	145	12 x M20 x 31	604
500 MA / SA	166	12 x M24 x 37	1042
MA / SA = HighTorque®			

Tbl-12: Specifications on mounting on the gear output side

9.3 Specifications on mounting onto a machine

Through-holes in gearhead housing				
Size / Design TP+	**Hole circle Ø [mm]**	**Quantity x diameter [ ] x [mm]**	**For screw size/ property class**	**Tightening torque [Nm]**
004 M / S	79	8 x 4.5	M4 / 12.9	4.55
010 M / S	109	8 x 5.5	M5 / 12.9	9
025 M / S	135	8 x 5.5	M5 / 12.9	9
050 M / S	168	12 x 6.6	M6 / 12.9	15.4
110 M / S	233	12 x 9.0	M8 / 12.9	37.3
300 M / S	280	16 x 13.5	M12 / 12.9	126
500 M / S	310	16 x 13.5	M12 / 12.9	126
010 MA / SA	109	16 x 5.5	M5 / 12.9	9
025 MA / SA	135	16 x 5.5	M5 / 12.9	9
050 MA / SA	168	24 x 6.6	M6 / 12.9	15.4
110 MA / SA	233	24 x 9.0	M8 / 12.9	37.3
300 MA / SA	280	32 x 13.5	M12 / 12.9	126
500 MA / SA	285	32 x 13.5	M12 / 12.9	126

Tbl-13: Specifications on mounting onto a machine; MA / SA = HighTorque®

9.4 Tightening torques for common thread sizes in general mechanics

The specified tightening torques for headless screws and nuts are calculated values and are based on the following conditions:

- Calculation acc. VDI 2230 (Issue February 2003)
- Friction value for thread and contact surfaces μ=0.10
- Exploitation of the yield stress 90 %

	Tightening torque [Nm] for threads												
Property class Bolt / nut	**M3**	**M4**	**M5**	**M6**	**M8**	**M10**	**M12**	**M14**	**M16**	**M18**	**M20**	**M22**	**M24**
8.8 / 8	1.15	2.64	5.24	8.99	21.7	42.7	73.5	118	180	258	363	493	625
10.9 / 10	1.68	3.88	7.69	13.2	31.9	62.7	108	173	265	368	516	702	890
12.9 / 12	1.97	4.55	9.00	15.4	37.3	73.4	126	203	310	431	604	821	1042

Tbl-14: Tightening torques for headless screws and nuts