WITTENSTEIN | alpha

SPK+ 210/240 TPK+ 300/500

High Performance Hypoid gearboxes

powerful
precise
efficient

Contents

SPK+ 8

SPK+ 210, technical and dimension data 8

SPK+ 240, technical and dimension data 12

TPK+ 18

TPK+ 300, technical and dimension data 18

TPK+ 500, technical and dimension data 22

TPK+ (High Torque) 28

TPK+ 110, technical and dimension data 28

TPK+ 300, technical and dimension data 30

TPK+ 500, technical and dimension data 32

Ordering code 34

The **SPK+/TPK+ High Performance Hypoid gearboxes**

Powerful products in the new hypoid range

To guarantee the highest possible productivity of your machine, WITTENSTEIN alpha has enhanced the range of hypoid planetary gearboxes. The newly developed bevel gears are derived from modern hypoid technology in combination with planetary gears with helical gearing. The result is the creation of the best product for maximized performance. With extremely high torque and high ratios we set new standards in the bevel gear market.

WITTENSTEIN alpha moves your world into new dimensions!

All features at a glance:

- Shaft and flange output
- Torques up to 10000 Nm
- Ratios up to i=10000
- Efficiency of up to 94 %
- Low noise emission ≤ 71 dB(A)
- High turning torque available up to 9500 Nm
- Highest positioning accuracy with less torsion play and high torsional rigidity
- Optimized seal technology (IP65)
- Flexible position of installation
- Very high input speed up to 4500 rpm

SPK+/TPK+
High Performance Hypoid gearboxes

WITTENSTEIN alpha moves your world into **new dimensions!**

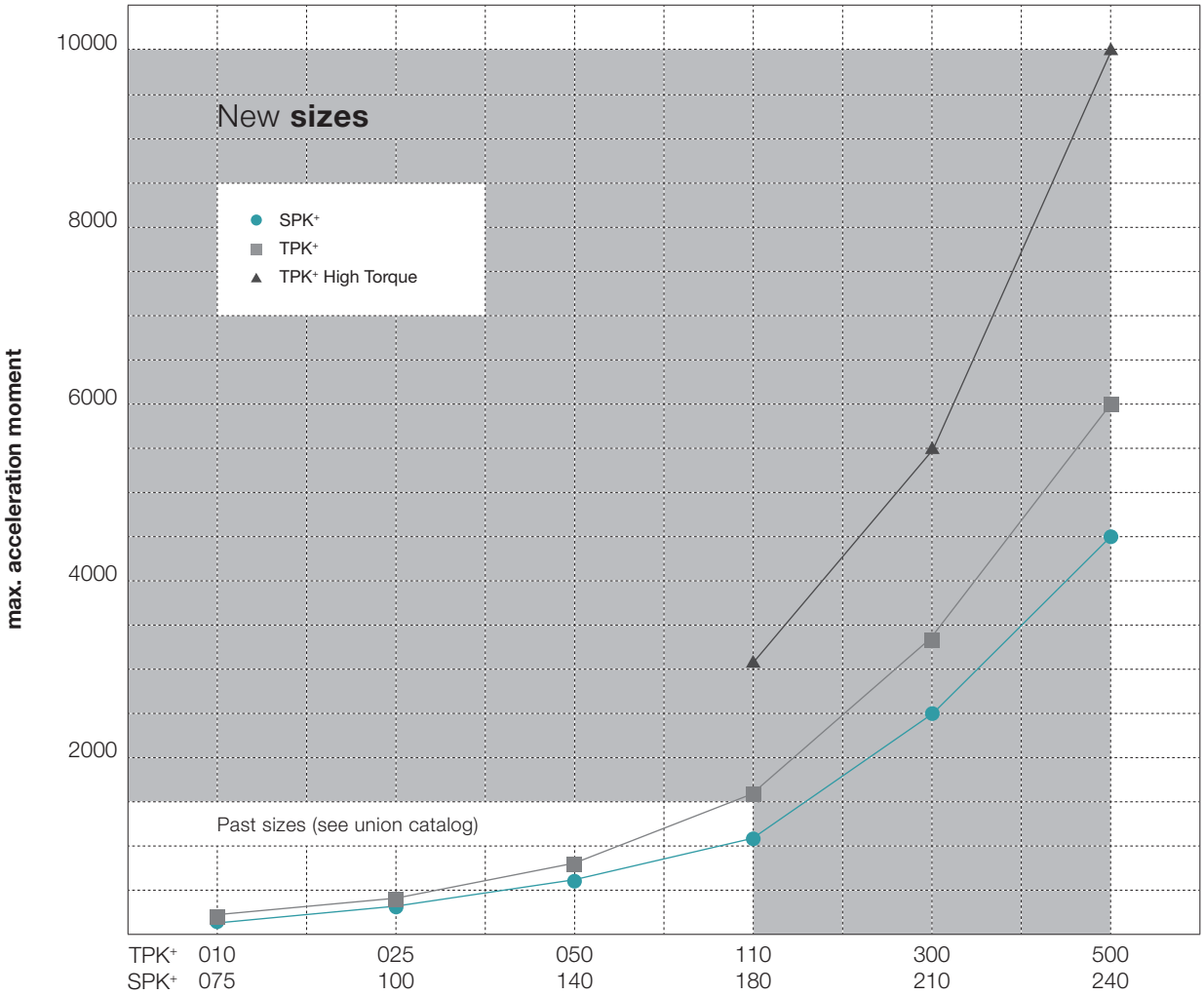

Size

Size	**TPK+ SPK+**	**010 075**	**025 100**	**050 140**	**110 180**	**300 210**	**500 240**
SPK+	T_{2B} Nm	110	300	600	1100	2500	4500
TPK+	T_{2B} Nm	130	350	750	1600	3300	6000
TPK+ High Torque	T_{2B} Nm	–	–	–	3100	5500	10000

The new hypoid gears in the overview
SPK+, TPK+ and TPK+ High Torque

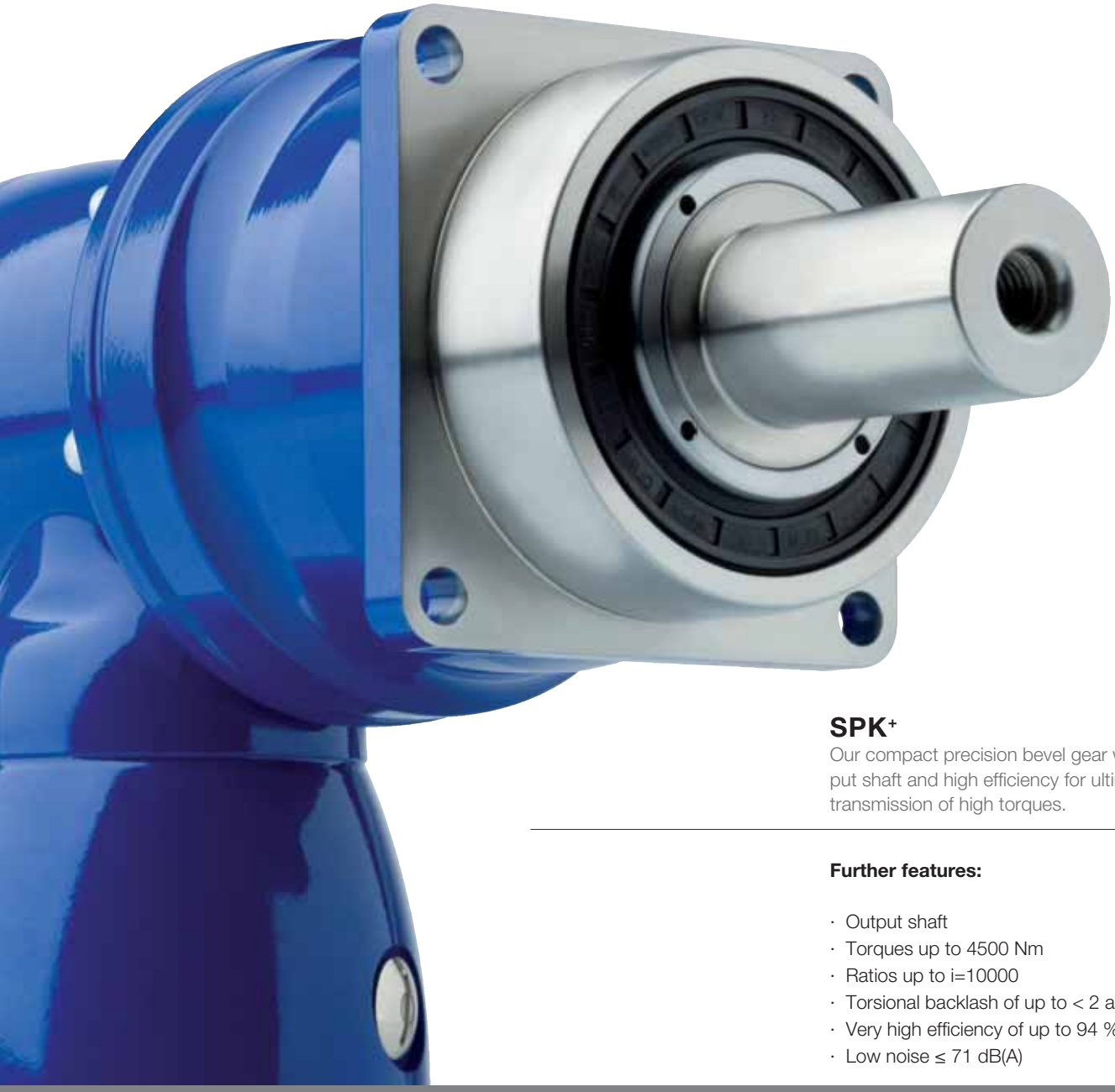

SPK+

Our compact precision bevel gear with output shaft and high efficiency for ultimate transmission of high torques.

Further features:

- Output shaft
- Torques up to 4500 Nm
- Ratios up to i=10000
- Torsional backlash of up to < 2 arcmin
- Very high efficiency of up to 94 %
- Low noise ≤ 71 dB(A)

SPK+/TPK+
High Performance Hypoid gearboxes

TPK+

Our compact precision bevel gear with output flange and high efficiency for transmission of high torques.

Further features:

- Output flange for high torsional rigidity
- Torques of up to 6000 Nm
- Ratios up to i=10000
- Torsional backlash of up to < 2 arcmin
- Very high efficiency of up to 94 %
- Very high quietness ≤ 71 dB(A)

TPK+ High Torque

Our power packet for highest positioning accuracy combines highest torques and torsional rigidity with the compactness of a bevel gear

Further features:

- Output flange
- Torques of up to 10000 Nm
- Ratios of up to i=5500
- Torsional backlash of up to < 1,3 arcmin
- High tilting moment of up to 9500 Nm
- Highest positioning accuracy
- Highest power density

SPK+ 210 MF 2-stage

			2-stage									
Ratio [a]	i		**12**	**16**	**20**	**25**	**28**	**35**	**40**	**50**	**70**	**100**
Max. acceleration torque (max. 1000 cycles per hour)	T_{2B}	Nm	2500	2500	2500	2500	2400	2400	1850	2300	2400	1900
Nominal output torque (with n_{1N})	T_{2N}	Nm	1500	1500	1500	1500	1400	1500	1400	1500	1400	1000
Emergency stop torque (permitted 1000 times during the service life of the gearhead)	T_{2Not}	Nm	3600	4200	5200	5200	5200	5200	3600	4500	5200	5000
Nominal input speed (with T_{2N} and 20°C ambient temperature) [b], [c]	n_{1N}	rpm	1500	1700	1700	1900	1700	1900	1700	1700	1700	1700
Max. continuous speed (with 20 % T_{2N} and 20°C ambient temperature)	n_{1Ncym}	rpm	1900	2300	2300	2700	2300	2700	2400	2400	2400	2400
Max. input speed	n_{1Max}	rpm	4000	4000	4000	4000	4000	4000	4000	4000	4000	4000
Mean no load running torque (with n_1 = 3000 rpm and 20°C gearhead temperature) [d]	T_{012}	Nm	18,5	17,0	15,0	13,0	14,0	12,0	15,0	15,0	14,0	13,0
Max. torsional backlash	j_t	arcmin	Standard ≤4 / Reduced ≤2									
Torsional rigidity	C_{t21}	Nm/arcmin	300	300	300	300	300	300	300	300	300	300
Max. axial force [e]	F_{2AMax}	N	30000									
Max. radial force [e]	F_{2RMax}	N	21000									
Max. tilting moment	M_{2KMax}	Nm	3100									
Efficiency at full load	η	%	94									
Service life (For calculation, see the Chapter "Information")	L_h	h	> 20000									
Weight incl. standard adapter plate	m	kg	–									
Operating noise (with n_1 = 3000 rpm no load)	L_{PA}	dB(A)	≤ 71									
Max. permitted housing temperature		°C	+90									
Ambient temperature		°C	0 to +40									
Lubrication			Lubricated for life									
Paint			Blue RAL 5002									
Direction of rotation			Motor and gearhead opposite directions									
Protection class			IP 65									
Moment of inertia (relates to the drive) **Clamping hub diameter [mm]** M 48	J_1	kgcm²	78,80	54,60	53,00	43,40	51,50	42,20	30,20	30,00	29,80	29,80

[a] Other ratios available on request
[b] Higher speeds are possible if the nominal torque is reduced
[c] For higher ambient temperatures, please reduce input speed
[d] Idling torques decrease during operation
[e] Refers to center of the output shaft or flange

Please contact us for information on the best configuration for S1 conditions of use (continuous operation).

2-stage:

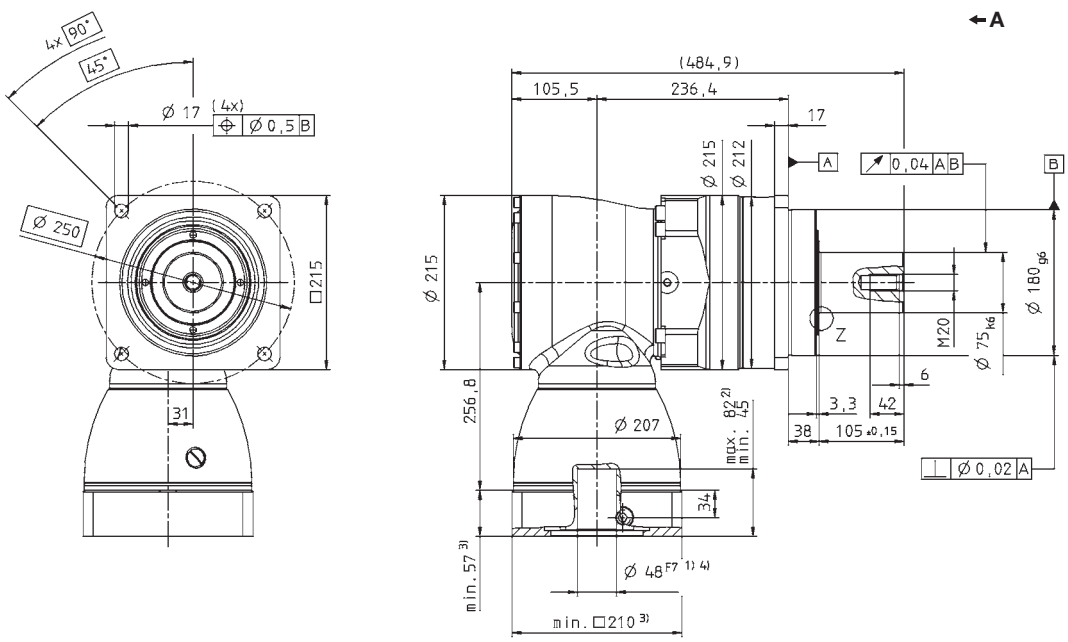

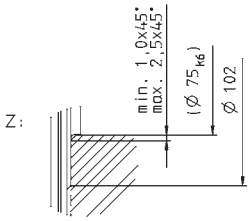

See technical data sheet for available clamping hub diameters (mass moment of inertia). Dimensions available on request.

Non-tolerated dimensions ±1 mm

1) Check motor shaft fit.
2) Min./Max. permissible motor shaft length. Longer motor shafts are adaptable, please contact us.
3) The dimensions depend on the motor.
4) Smaller motor shaft diameter is compensated by a bushing with a minimum thickness of 1 mm.

⚠ Motor mounting according to operating manual

SPK+ 210 MF 3-stage

			3-stage													
Ratio [a]		i	**64**	**84**	**100**	**125**	**140**	**175**	**200**	**250**	**280**	**350**	**400**	**500**	**700**	**1000**
Max. acceleration torque (max. 1000 cycles per hour)		T_{2B} Nm	2400	2400	2500	2500	2500	2500	2500	2500	2400	2400	1900	2350	2400	1900
Nominal output torque (with n_{1N})		T_{2N} Nm	1500	1500	1500	1500	1500	1500	1500	1500	1400	1400	1500	1500	1400	1000
Emergency stop torque (permitted 1000 times during the service life of the gearhead)		T_{2Not} Nm	4200	3600	5200	5200	5200	5200	5200	5200	5200	5200	3600	4500	5200	5000
Nominal input speed (with T_{2N} and 20°C ambient temperature) [b), c)]		n_{1N} rpm	2700	2700	2700	2700	2700	2700	2700	2900	2700	2900	3400	3400	3400	3400
Max. continuous speed (with 20 % T_{2N} and 20°C ambient temperature)		n_{1Ncym} rpm	3500	3500	3500	3500	3500	3500	3500	3500	3500	3500	3500	3500	3800	3800
Max. input speed		n_{1Max} rpm	4000	4000	4000	4000	4000	4000	4000	4000	4000	4000	4000	4000	4000	4000
Mean no load running torque (with n_1 = 3000 rpm and 20°C gearhead temperature) [d)]		T_{012} Nm	2,4	1,2	1,9	1,7	1,3	1,3	1,0	1,0	1,0	1,0	1,0	1,0	1,0	1,0
Max. torsional backlash		j_t arcmin	Standard ≤4 / Reduced ≤2													
Torsional rigidity		C_{t21} Nm/arcmin	300	300	300	300	300	300	300	300	300	300	300	300	300	300
Max. axial force [e)]		F_{2AMax} N	30000													
Max. radial force [e)]		F_{2RMax} N	21000													
Max. tilting moment		M_{2KMax} Nm	3100													
Efficiency at full load		η %	92													
Service life (For calculation, see the Chapter "Information")		L_h h	> 20000													
Weight incl. standard adapter plate		m kg	–													
Operating noise (with n_1 = 3000 rpm no load)		L_{PA} dB(A)	≤ 71													
Max. permitted housing temperature		°C	+90													
Ambient temperature		°C	0 to +40													
Lubrication			Lubricated for life													
Paint			Blue RAL 5002													
Direction of rotation			Motor and gearhead opposite directions													
Protection class			IP 65													
Moment of inertia (relates to the drive) Clamping hub diameter [mm]	K 38	J_1 kgcm²	14,00	10,90	12,30	12,00	10,90	10,70	10,10	10,00	10,10	10,00	9,90	9,90	9,90	9,90
	M 48	J_1 kgcm²	28,70	25,60	27,10	26,70	26,70	25,60	24,80	24,70	24,80	24,70	24,60	24,60	24,60	24,60

[a] Other ratios available on request
[b] Higher speeds are possible if the nominal torque is reduced
[c] For higher ambient temperatures, please reduce input speed
[d] Idling torques decrease during operation
[e] Refers to center of the output shaft or flange

Please contact us for information on the best configuration for S1 conditions of use (continuous operation).

3-stage:

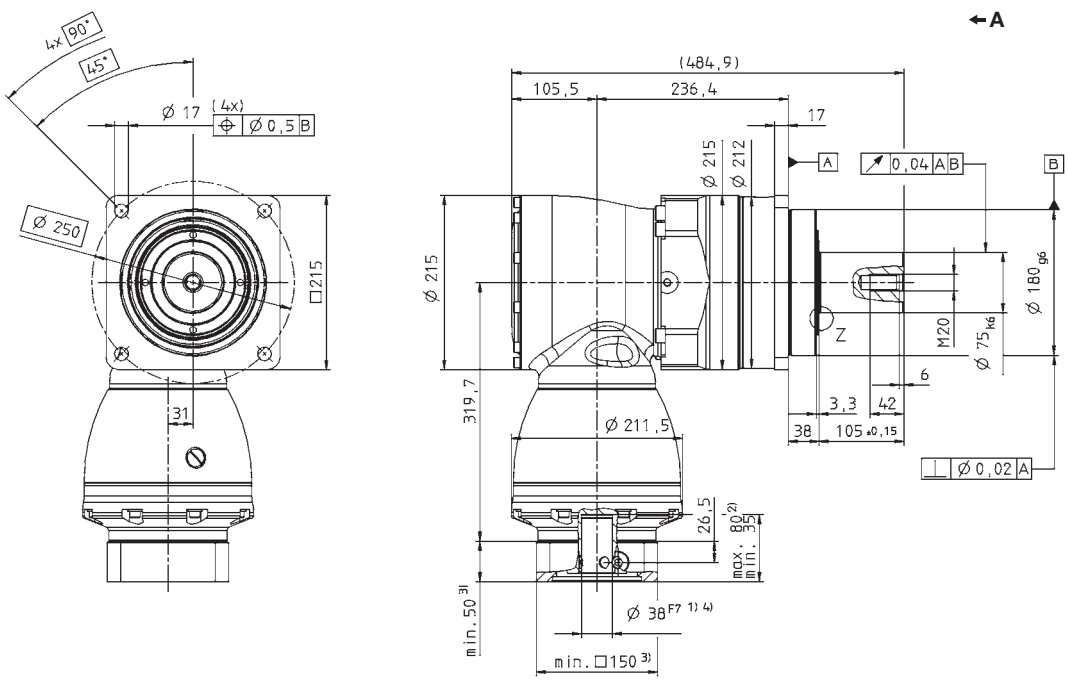

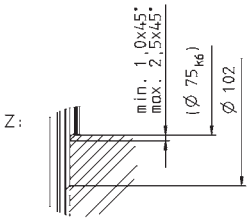

See technical data sheet for available clamping hub diameters (mass moment of inertia). Dimensions available on request.

Non-tolerated dimensions ±1 mm

1) Check motor shaft fit.
2) Min./Max. permissible motor shaft length. Longer motor shafts are adaptable, please contact us.
3) The dimensions depend on the motor.
4) Smaller motor shaft diameter is compensated by a bushing with a minimum thickness of 1 mm.

⚠ Motor mounting according to operating manual

SPK+ 240 MF 3-stage

			3-stage													
Ratio [a]	i		**48**	**64**	**100**	**125**	**140**	**175**	**200**	**250**	**280**	**350**	**400**	**500**	**700**	**1000**
Max. acceleration torque (max. 1000 cycles per hour)	T_{2B}	Nm	4500	4500	4500	4500	4500	4500	4500	4500	4300	4500	4000	4300	4300	3400
Nominal output torque (with n_{1N})	T_{2N}	Nm	2500	2500	2500	2500	2500	2500	2500	2500	2300	2500	2500	2500	2300	1700
Emergency stop torque (permitted 1000 times during the service life of the gearhead)	T_{2Not}	Nm	6400	8000	8500	8500	8500	8500	8500	8500	8500	8500	8500	8500	8500	6800
Nominal input speed (with T_{2N} and 20°C ambient temperature) [b), c)]	n_{1N}	rpm	1800	1900	1900	2100	1900	2100	2100	2100	2100	2100	2100	2100	2100	2100
Max. continuous speed (with 20 % T_{2N} and 20°C ambient temperature)	n_{1Ncym}	rpm	2000	2200	2600	2600	2300	2300	2300	2300	2300	2300	2300	2300	2300	2300
Max. input speed	n_{1Max}	rpm	4500	4500	4500	4500	4500	4500	4500	4500	4500	4500	4500	4500	4500	4500
Mean no load running torque (with n_1 = 3000 rpm and 20°C gearhead temperature) [d)]	T_{012}	Nm	11,0	8,0	7,0	7,0	8,0	8,0	7,0	6,0	6,0	6,0	6,0	6,0	6,0	6,0
Max. torsional backlash	j_t	arcmin	Standard ≤ 5,5 / Reduced ≤ 3,5													
Torsional rigidity	C_{t21}	Nm/arcmin	510	510	510	510	510	510	510	510	510	510	510	510	510	510
Max. axial force [e)]	F_{2AMax}	N	33000													
Max. radial force [e)]	F_{2RMax}	N	30000													
Max. tilting moment	M_{2KMax}	Nm	5000													
Efficiency at full load	η	%	92													
Service life (For calculation, see the Chapter "Information")	L_h	h	> 20000													
Weight incl. standard adapter plate	m	kg	–													
Operating noise (with n_1 = 3000 rpm no load)	L_{PA}	dB(A)	≤ 71													
Max. permitted housing temperature		°C	+90													
Ambient temperature		°C	0 to +40													
Lubrication			Lubricated for life													
Paint			Blue RAL 5002													
Direction of rotation			Motor and gearhead opposite directions													
Protection class			IP 65													
Moment of inertia (relates to the drive) **Clamping hub diameter [mm]** K 38	J_1	kgcm²	26,5	20,00	17,00	17,00	15,00	15,00	13,00	13,00	13,00	13,00	13,00	13,00	13,00	13,00

[a)] Other ratios available on request
[b)] Higher speeds are possible if the nominal torque is reduced
[c)] For higher ambient temperatures, please reduce input speed
[d)] Idling torques decrease during operation
[e)] Refers to center of the output shaft or flange

Please contact us for information on the best configuration for S1 conditions of use (continuous operation).

3-stage:

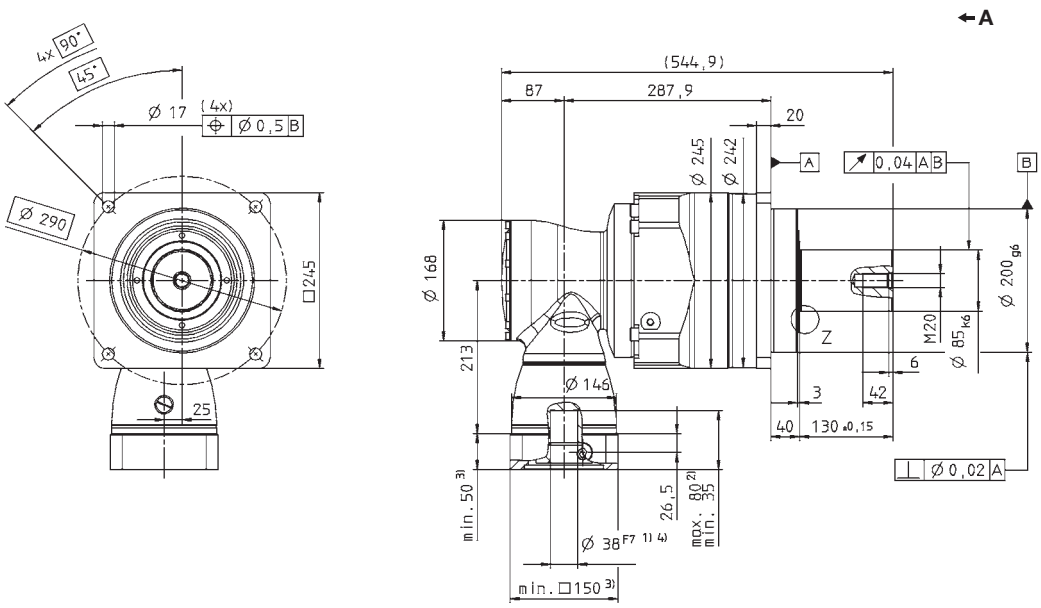

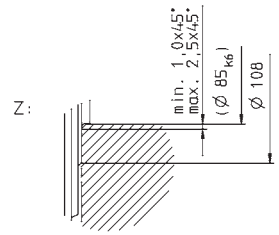

See technical data sheet for available clamping hub diameters (mass moment of inertia). Dimensions available on request.

Non-tolerated dimensions ±1 mm

1) Check motor shaft fit.
2) Min./Max. permissible motor shaft length. Longer motor shafts are adaptable, please contact us.
3) The dimensions depend on the motor.
4) Smaller motor shaft diameter is compensated by a bushing with a minimum thickness of 1 mm.

⚠ Motor mounting according to operating manual

SPK+ 240 MF 4-stage i=144-1000

			4-stage												
Ratio [a]		i	**144**	**192**	**256**	**300**	**375**	**420**	**500**	**560**	**600**	**700**	**800**	**875**	**1000**
Max. acceleration torque (max. 1000 cycles per hour)		T_{2B} Nm	4500	4500	4500	4500	4500	4500	4500	4500	4500	4500	4500	4500	4500
Nominal output torque (with n_{1N})		T_{2N} Nm	2500	2500	2500	2500	2500	2500	2500	2500	2500	2500	2500	2500	2500
Emergency stop torque (permitted 1000 times during the service life of the gearhead)		T_{2Not} Nm	8000	8000	8000	8500	8500	8500	8500	8500	8500	8500	8500	8500	8500
Nominal input speed (with T_{2N} and 20°C ambient temperature) [b), c)]		n_{1N} rpm	2700	2900	2900	2900	2900	2900	2900	2900	2900	2900	2900	2900	3200
Max. continuous speed (with 20 % T_{2N} and 20°C ambient temperature)		n_{1Ncym} rpm	3800	4000	4000	4000	4000	4000	4000	4000	4000	4000	4000	4000	4200
Max. input speed		n_{1Max} rpm	4500	4500	4500	4500	4500	4500	4500	4500	4500	4500	4500	4500	4500
Mean no load running torque (with n_1 = 3000 rpm and 20°C gearhead temperature) [d)]		T_{012} Nm	3,2	2,3	1,6	1,3	0,7	0,9	0,9	0,8	0,7	0,7	0,6	0,6	0,5
Max. torsional backlash		j_t arcmin	Standard ≤ 5,5 / Reduced ≤ 3,5												
Torsional rigidity		C_{t21} Nm/arcmin	510	510	510	510	510	510	510	510	510	510	510	510	510
Max. axial force [e)]		F_{2AMax} N	33000												
Max. radial force [e)]		F_{2RMax} N	30000												
Max. tilting moment		M_{2KMax} Nm	5000												
Efficiency at full load		η %	90												
Service life (For calculation, see the Chapter "Information")		L_h h	> 20000												
Weight incl. standard adapter plate		m kg	–												
Operating noise (with n_1 = 3000 rpm no load)		L_{PA} dB(A)	≤ 71												
Max. permitted housing temperature		°C	+90												
Ambient temperature		°C	0 to +40												
Lubrication			Lubricated for life												
Paint			Blue RAL 5002												
Direction of rotation			Motor and gearhead opposite directions												
Protection class			IP 65												
Moment of inertia (relates to the drive) Clamping hub diameter [mm]	G 24	J_1 kgcm²	5,96	4,30	3,90	3,32	3,31	2,80	3,18	2,80	2,49	2,73	2,49	2,73	2,46
	K 38	J_1 kgcm²	12,87	11,19	10,81	10,23	10,22	9,72	10,09	9,71	9,40	9,65	9,40	9,65	9,37

[a] Other ratios available on request
[b] Higher speeds are possible if the nominal torque is reduced
[c] For higher ambient temperatures, please reduce input speed
[d] Idling torques decrease during operation
[e] Refers to center of the output shaft or flange

Please contact us for information on the best configuration for S1 conditions of use (continuous operation).

4-stage:

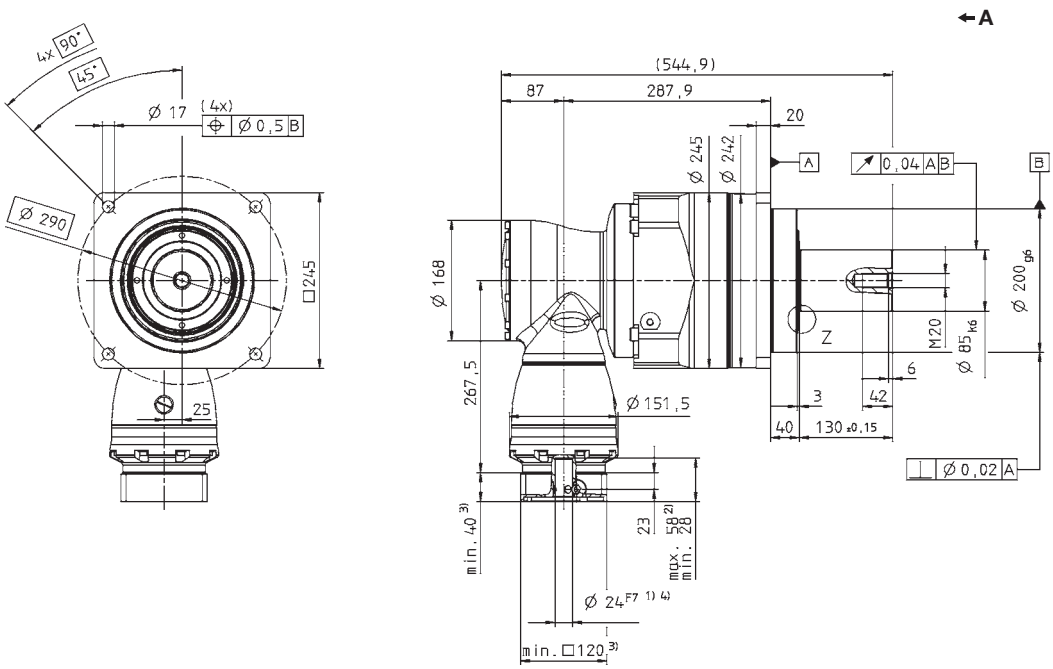

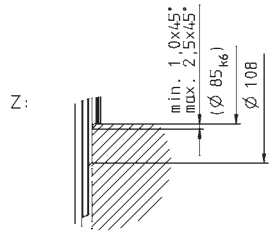

See technical data sheet for available clamping hub diameters (mass moment of inertia). Dimensions available on request.

Non-tolerated dimensions ±1 mm

1) Check motor shaft fit.
2) Min./Max. permissible motor shaft length. Longer motor shafts are adaptable, please contact us.
3) The dimensions depend on the motor.
4) Smaller motor shaft diameter is compensated by a bushing with a minimum thickness of 1 mm.

⚠ Motor mounting according to operating manual

SPK+ 240 MF 4-stage i=1225-10000

			4-stage								
Ratio [a]	i		**1225**	**1400**	**1750**	**2000**	**2800**	**3500**	**5000**	**7000**	**10000**
Max. acceleration torque (max. 1000 cycles per hour)	T_{2B}	Nm	4500	4500	4500	4200	4300	4500	4300	4300	3400
Nominal output torque (with n_{1N})	T_{2N}	Nm	2500	2500	2500	2500	2300	2500	2500	2300	1700
Emergency stop torque (permitted 1000 times during the service life of the gearhead)	T_{2Not}	Nm	8500	8500	8500	8000	8500	8500	8500	8500	6800
Nominal input speed (with T_{2N} and 20°C ambient temperature) [b], [c]	n_{1N}	rpm	2900	2900	3200	3900	3900	3900	3900	3900	3900
Max. continuous speed (with 20 % T_{2N} and 20°C ambient temperature)	n_{1Ncym}	rpm	4000	4000	4200	4200	4200	4200	4200	4200	4200
Max. input speed	n_{1Max}	rpm	4500	4500	4500	4500	4500	4500	4500	4500	4500
Mean no load running torque (with n_1 = 3000 rpm and 20°C gearhead temperature) [d]	T_{012}	Nm	0,6	0,6	0,4	0,4	0,4	0,4	0,4	0,3	0,3
Max. torsional backlash	j_t	arcmin	Standard ≤ 5,5 / Reduced ≤ 3,5								
Torsional rigidity	C_{t21}	Nm/arcmin	510	510	510	510	510	510	510	510	510
Max. axial force [e]	F_{2AMax}	N	33000								
Max. radial force [e]	F_{2RMax}	N	30000								
Max. tilting moment	M_{2KMax}	Nm	5000								
Efficiency at full load	η	%	90								
Service life (For calculation, see the Chapter "Information")	L_h	h	> 20000								
Weight incl. standard adapter plate	m	kg	–								
Operating noise (with n_1 = 3000 rpm no load)	L_{PA}	dB(A)	≤ 71								
Max. permitted housing temperature		°C	+90								
Ambient temperature		°C	0 to +40								
Lubrication			Lubricated for life								
Paint			Blue RAL 5002								
Direction of rotation			Motor and gearhead opposite directions								
Protection class			IP 65								
Moment of inertia (relates to the drive) **Clamping hub diameter [mm]** G 24	J_1	kgcm²	2,73	2,49	2,46	2,42	2,42	2,42	2,42	2,42	2,42
Moment of inertia (relates to the drive) **Clamping hub diameter [mm]** K 38	J_1	kgcm²	9,64	9,40	9,37	9,33	9,33	9,33	9,33	9,33	9,33

[a] Other ratios available on request
[b] Higher speeds are possible if the nominal torque is reduced
[c] For higher ambient temperatures, please reduce input speed
[d] Idling torques decrease during operation
[e] Refers to center of the output shaft or flange

Please contact us for information on the best configuration for S1 conditions of use (continuous operation).

4-stage:

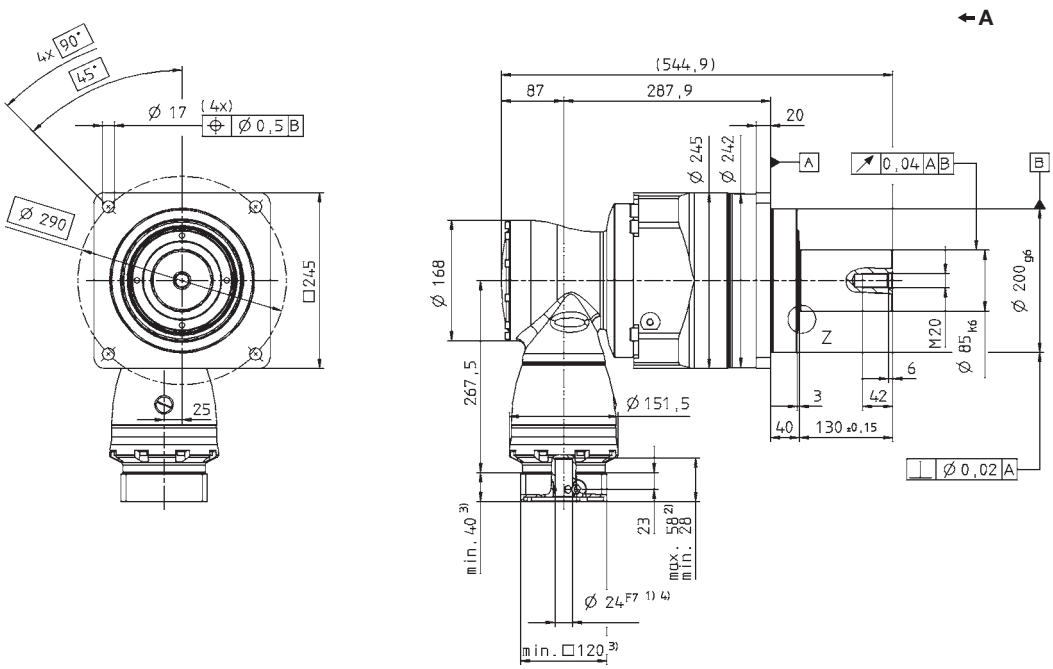

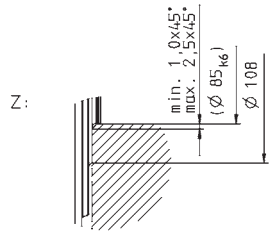

See technical data sheet for available clamping hub diameters (mass moment of inertia). Dimensions available on request.

Non-tolerated dimensions ±1 mm

1) Check motor shaft fit.
2) Min./Max. permissible motor shaft length. Longer motor shafts are adaptable, please contact us.
3) The dimensions depend on the motor.
4) Smaller motor shaft diameter is compensated by a bushing with a minimum thickness of 1 mm.

⚠ Motor mounting according to operating manual

TPK+ 300 MF 2-stage

			2-stage							
Ratio [a]	i		**15**	**20**	**25**	**35**	**49**	**50**	**70**	**100**
Max. acceleration torque (max. 1000 cycles per hour)	T_{2B}	Nm	3200	3200	3200	3300	3300	2350	3300	2800
Nominal output torque (with n_{1N})	T_{2N}	Nm	2000	2000	2000	1800	1800	1800	1800	1600
Emergency stop torque (permitted 1000 times during the service life of the gearhead)	T_{2Not}	Nm	4500	5250	5250	7350	6800	4500	6300	8750
Nominal input speed (with T_{2N} and 20°C ambient temperature) [b], [c]	n_{1N}	rpm	1500	1700	1900	1900	1700	1700	1700	1700
Max. continuous speed (with 20 % T_{2N} and 20°C ambient temperature)	n_{1Ncym}	rpm	1900	2300	2700	2700	2400	2400	2400	2400
Max. input speed	n_{1Max}	rpm	4000	4000	4000	4000	4000	4000	4000	4000
Mean no load running torque (with n_1 = 3000 rpm and 20°C gearhead temperature) [d]	T_{012}	Nm	18,5	15,0	13,0	12,0	12,0	15,0	14,0	13,0
Max. torsional backlash	j_t	arcmin	Standard ≤ 4 / Reduced ≤ 2							
Torsional rigidity	C_{t21}	Nm/arcmin	615	640	664	730	728	658	727	642
Max. axial force [e]	F_{2AMax}	N	33000							
Max. tilting moment	M_{2KMax}	Nm	5900							
Efficiency at full load	η	%	94							
Service life (For calculation, see the Chapter "Information")	L_h	h	> 20000							
Weight incl. standard adapter plate	m	kg	–							
Operating noise (with n_1 = 3000 rpm no load)	L_{PA}	dB(A)	≤ 71							
Max. permitted housing temperature		°C	+90							
Ambient temperature		°C	0 to +40							
Lubrication			Lubricated for life							
Paint			Blue RAL 5002							
Direction of rotation			Motor and gearhead opposite directions							
Protection class			IP 65							
Moment of inertia (relates to the drive) **M 48** Clamping hub diameter [mm]	J_1	kgcm²	74,00	52,00	43,00	43,00	35,00	30,00	30,00	30,00

[a] Other ratios available on request
[b] Higher speeds are possible if the nominal torque is reduced
[c] For higher ambient temperatures, please reduce input speed
[d] Idling torques decrease during operation
[e] Refers to center of the output shaft or flange

Please contact us for information on the best configuration for S1 conditions of use (continuous operation).

2-stage:

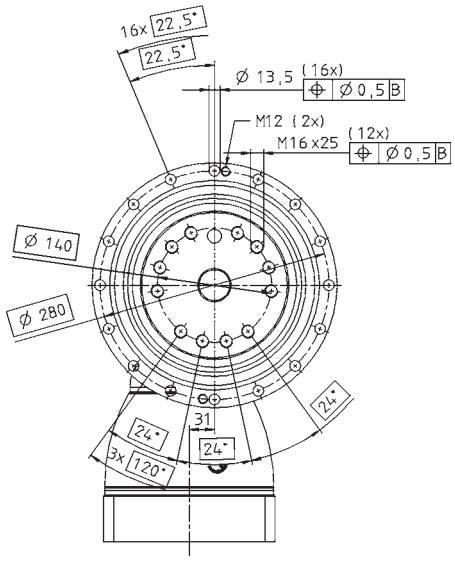

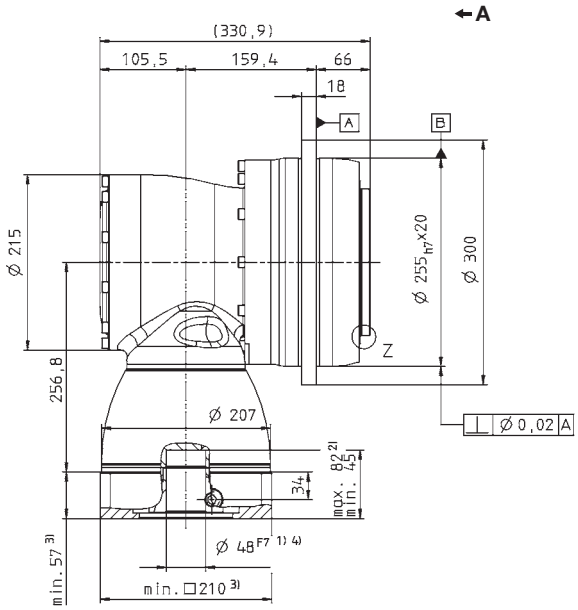

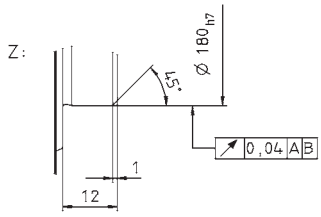

See technical data sheet for available clamping hub diameters (mass moment of inertia). Dimensions available on request.

Non-tolerated dimensions ±1 mm

1) Check motor shaft fit.
2) Min./Max. permissible motor shaft length. Longer motor shafts are adaptable, please contact us.
3) The dimensions depend on the motor.
4) Smaller motor shaft diameter is compensated by a bushing with a minimum thickness of 1 mm.

⚠ Motor mounting according to operating manual

TPK+ 300 MF 3-stage

			3-stage											
Ratio [a]	i		**63**	**100**	**125**	**140**	**175**	**200**	**250**	**280**	**350**	**500**	**700**	**1000**
Max. acceleration torque (max. 1000 cycles per hour)	T_{2B}	Nm	3300	3200	3200	3200	3200	3200	3200	3300	3300	2350	3300	2800
Nominal output torque (with n_{1N})	T_{2N}	Nm	1800	2000	2000	2000	2000	2000	2000	1800	1800	1800	1800	1600
Emergency stop torque (permitted 1000 times during the service life of the gearhead)	T_{2Not}	Nm	6300	5250	5250	5250	5250	5250	5250	7350	7350	4500	6300	8750
Nominal input speed (with T_{2N} and 20°C ambient temperature) [b), c)]	n_{1N}	rpm	2700	2700	2700	2700	2700	2700	2900	2700	2900	3400	3400	3400
Max. continuous speed (with 20 % T_{2N} and 20°C ambient temperature)	n_{1Ncym}	rpm	3200	3500	3500	3500	3500	3500	3500	3500	3500	3800	3800	3800
Max. input speed	n_{1Max}	rpm	4000	4000	4000	4000	4000	4000	4000	4000	4000	4000	4000	4000
Mean no load running torque (with n_1 = 3000 rpm and 20°C gearhead temperature) [d)]	T_{012}	Nm	5,4	3,0	2,5	2,1	1,9	1,5	1,4	1,3	1,2	1,1	1,1	1,0
Max. torsional backlash	j_t	arcmin	Standard ≤ 4 / Reduced ≤ 2											
Torsional rigidity	C_{t21}	Nm/arcmin	699	640	664	640	664	640	664	715	730	658	727	642
Max. axial force [e)]	F_{2AMax}	N	33000											
Max. tilting moment	M_{2KMax}	Nm	5900											
Efficiency at full load	η	%	92											
Service life (For calculation, see the Chapter "Information")	L_h	h	> 20000											
Weight incl. standard adapter plate	m	kg	–											
Operating noise (with n_1 = 3000 rpm no load)	L_{PA}	dB(A)	≤ 71											
Max. permitted housing temperature		°C	+90											
Ambient temperature		°C	0 to +40											
Lubrication			Lubricated for life											
Paint			Blue RAL 5002											
Direction of rotation			Motor and gearhead opposite directions											
Protection class			IP 65											
Moment of inertia (relates to the drive) Clamping hub diameter [mm] K 38	J_1	kgcm²	17,80	14,10	12,10	11,00	10,80	10,20	10,10	10,10	10,00	9,90	9,90	9,90
Moment of inertia (relates to the drive) Clamping hub diameter [mm] M 48	J_1	kgcm²	32,50	28,80	26,80	25,70	25,50	24,90	24,80	24,90	24,80	24,60	24,60	24,60

[a] Other ratios available on request
[b] Higher speeds are possible if the nominal torque is reduced
[c] For higher ambient temperatures, please reduce input speed
[d] Idling torques decrease during operation
[e] Refers to center of the output shaft or flange

Please contact us for information on the best configuration for S1 conditions of use (continuous operation).

3-stage:

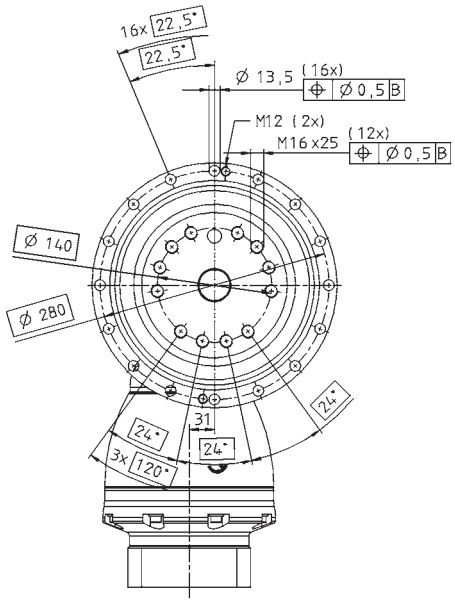

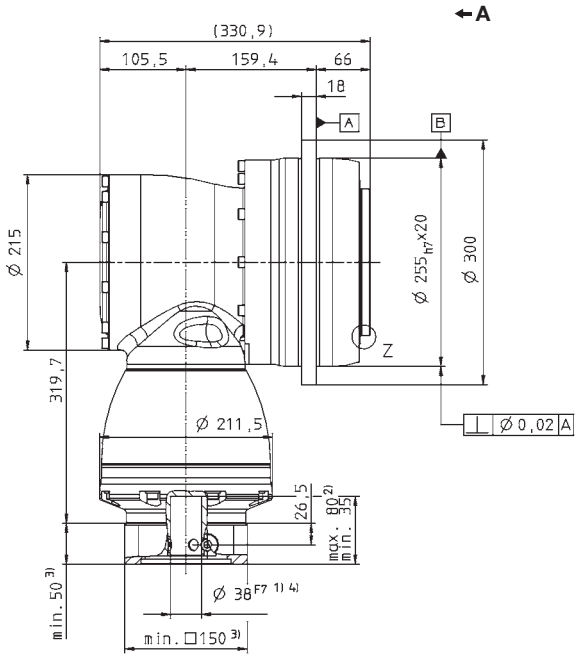

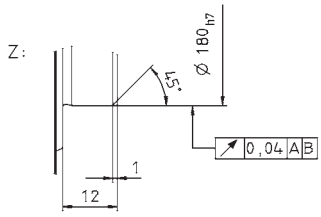

See technical data sheet for available clamping hub diameters (mass moment of inertia). Dimensions available on request.

Non-tolerated dimensions ±1 mm

1) Check motor shaft fit.
2) Min./Max. permissible motor shaft length. Longer motor shafts are adaptable, please contact us.
3) The dimensions depend on the motor.
4) Smaller motor shaft diameter is compensated by a bushing with a minimum thickness of 1 mm.

⚠ Motor mounting according to operating manual

TPK+ 500 MF 3-stage

			3-stage									
Ratio [a]	i		**100**	**125**	**140**	**175**	**200**	**250**	**350**	**500**	**700**	**1000**
Max. acceleration torque (max. 1000 cycles per hour)	T_{2B}	Nm	6000	6000	5000	6000	4200	5250	6000	4500	5000	4800
Nominal output torque (with n_{1N})	T_{2N}	Nm	3350	3800	3350	3800	3350	3800	3800	2900	2800	2900
Emergency stop torque (permitted 1000 times during the service life of the gearhead)	T_{2Not}	Nm	10000	12500	9000	11250	8000	10000	14000	15000	15000	15000
Nominal input speed (with T_{2N} and 20°C ambient temperature) [b], [c]	n_{1N}	rpm	2600	2600	2300	2300	2300	2300	2300	2300	2300	2300
Max. continuous speed (with 20 % T_{2N} and 20°C ambient temperature)	n_{1Ncym}	rpm	3500	3500	3100	3100	3000	3000	3000	3000	3000	3000
Max. input speed	n_{1Max}	rpm	4500	4500	4500	4500	4500	4500	4500	4500	4500	4500
Mean no load running torque (with n_1 = 3000 rpm and 20°C gearhead temperature) [d]	T_{012}	Nm	5,5	5,5	8,5	8,5	6,0	6,0	6,0	6,0	6,0	6,0
Max. torsional backlash	j_t	arcmin	Standard ≤ 3,3 / Reduced ≤ 2,3									
Torsional rigidity	C_{t21}	Nm/arcmin	1250	1350	1250	1350	1250	1350	1350	1280	1240	1050
Max. axial force [e]	F_{2AMax}	N	50000									
Max. tilting moment	M_{2KMax}	Nm	8800									
Efficiency at full load	η	%	92									
Service life (For calculation, see the Chapter "Information")	L_h	h	> 20000									
Weight incl. standard adapter plate	m	kg	–									
Operating noise (with n_1 = 3000 rpm no load)	L_{PA}	dB(A)	≤ 71									
Max. permitted housing temperature		°C	+90									
Ambient temperature		°C	0 to +40									
Lubrication			Lubricated for life									
Paint			Blue RAL 5002									
Direction of rotation			Motor and gearhead opposite directions									
Protection class			IP 65									
Moment of inertia (relates to the drive) **Clamping hub diameter [mm]** K 38	J_1	kgcm²	16,70	16,70	16,50	16,50	16,40	16,40	16,40	16,40	16,40	16,40

[a] Other ratios available on request
[b] Higher speeds are possible if the nominal torque is reduced
[c] For higher ambient temperatures, please reduce input speed
[d] Idling torques decrease during operation
[e] Refers to center of the output shaft or flange

Please contact us for information on the best configuration for S1 conditions of use (continuous operation).

3-stage:

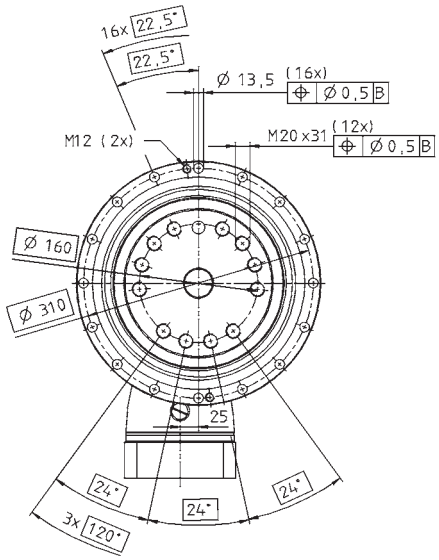

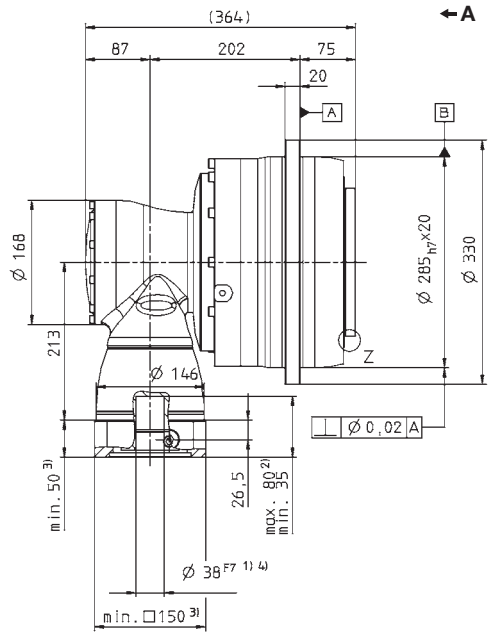

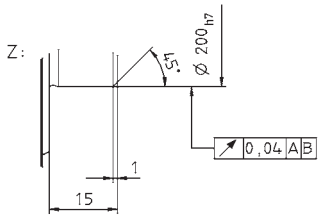

See technical data sheet for available clamping hub diameters (mass moment of inertia). Dimensions available on request.

Non-tolerated dimensions ±1 mm

1) Check motor shaft fit.
2) Min./Max. permissible motor shaft length. Longer motor shafts are adaptable, please contact us.
3) The dimensions depend on the motor.
4) Smaller motor shaft diameter is compensated by a bushing with a minimum thickness of 1 mm.

⚠ Motor mounting according to operating manual

TPK+ 500 MF 4-stage i=180-1000

			4-stage											
Ratio [a]		i	**180**	**240**	**300**	**375**	**420**	**500**	**560**	**600**	**700**	**800**	**875**	**1000**
Max. acceleration torque (max. 1000 cycles per hour)		T_{2B} Nm	6000	6000	6000	6000	6000	6000	6000	6000	6000	6000	6000	6000
Nominal output torque (with n_{1N})		T_{2N} Nm	3350	3350	3350	3800	3350	3350	3350	3350	3350	3350	3800	3350
Emergency stop torque (permitted 1000 times during the service life of the gearhead)		T_{2Not} Nm	10000	10000	10000	12500	10000	10000	10000	10000	10000	10000	12500	10000
Nominal input speed (with T_{2N} and 20°C ambient temperature) [b), c)]		n_{1N} rpm	2700	2900	2900	2900	2900	2900	2900	2900	2900	2900	2900	3200
Max. continuous speed (with 20 % T_{2N} and 20°C ambient temperature)		n_{1Ncym} rpm	3800	4000	4000	4000	4000	4000	4000	4000	4000	4000	4000	4200
Max. input speed		n_{1Max} rpm	4500	4500	4500	4500	4500	4500	4500	4500	4500	4500	4500	4500
Mean no load running torque (with n_1 = 3000 rpm and 20°C gearhead temperature) [d)]		T_{012} Nm	3,4	2,5	1,6	1,4	1,1	1	1	0,8	0,8	0,7	0,7	0,6
Max. torsional backlash		j_t arcmin	Standard ≤ 3,3 / Reduced ≤ 2,3											
Torsional rigidity		C_{t21} Nm/arcmin	1250	1250	1250	1300	1250	1350	1250	1250	1262	1250	1350	1250
Max. axial force [e)]		F_{2AMax} N	50000											
Max. tilting moment		M_{2KMax} Nm	8800											
Efficiency at full load		η %	90											
Service life (For calculation, see the Chapter "Information")		L_h h	> 20000											
Weight incl. standard adapter plate		m kg	–											
Operating noise (with n_1 = 3000 rpm no load)		L_{PA} dB(A)	≤ 71											
Max. permitted housing temperature		°C	+90											
Ambient temperature		°C	0 to +40											
Lubrication			Lubricated for life											
Paint			Blue RAL 5002											
Direction of rotation			Motor and gearhead opposite directions											
Protection class			IP 65											
Moment of inertia (relates to the drive) Clamping hub diameter [mm]	G 24	J_1 kgcm²	5,93	4,29	3,33	3,32	2,81	3,19	2,80	2,50	2,74	2,49	2,74	2,46
	K 38	J_1 kgcm²	12,84	11,18	10,24	10,23	9,72	10,10	9,71	9,41	9,65	9,40	9,65	9,37

[a] Other ratios available on request
[b] Higher speeds are possible if the nominal torque is reduced
[c] For higher ambient temperatures, please reduce input speed
[d] Idling torques decrease during operation
[e] Refers to center of the output shaft or flange

Please contact us for information on the best configuration for S1 conditions of use (continuous operation).

4-stage:

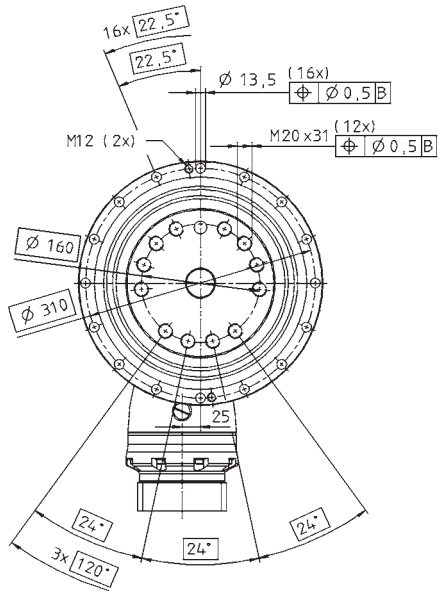

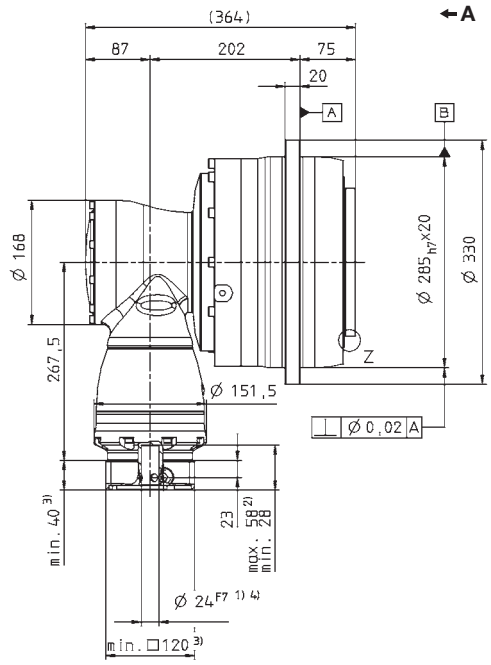

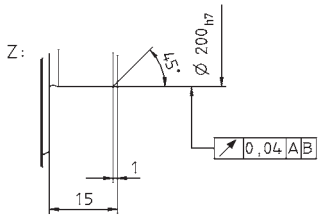

See technical data sheet for available clamping hub diameters (mass moment of inertia). Dimensions available on request.

Non-tolerated dimensions ±1 mm

1) Check motor shaft fit.
2) Min./Max. permissible motor shaft length. Longer motor shafts are adaptable, please contact us.
3) The dimensions depend on the motor.
4) Smaller motor shaft diameter is compensated by a bushing with a minimum thickness of 1 mm.

⚠ Motor mounting according to operating manual

TPK+ 500 MF 4-stage i=1225-10000

			4-stage								
Ratio [a]	i		**1225**	**1400**	**1750**	**2000**	**2800**	**3500**	**5000**	**7000**	**10000**
Max. acceleration torque (max. 1000 cycles per hour)	T_{2B}	Nm	6000	6000	6000	4200	5000	6000	4500	5000	4800
Nominal output torque (with n_{1N})	T_{2N}	Nm	3800	3800	3800	3200	2800	3800	2900	2800	2900
Emergency stop torque (permitted 1000 times during the service life of the gearhead)	T_{2Not}	Nm	15000	15000	15000	8000	11200	14000	15000	15000	15000
Nominal input speed (with T_{2N} and 20°C ambient temperature) [b), c)]	n_{1N}	rpm	2900	2900	3200	3900	3900	3900	3900	3900	3900
Max. continuous speed (with 20 % T_{2N} and 20°C ambient temperature)	n_{1Ncym}	rpm	4000	4000	4200	4200	4200	4200	4200	4200	4200
Max. input speed	n_{1Max}	rpm	4500	4500	4500	4500	4500	4500	4500	4500	4500
Mean no load running torque (with n_1 = 3000 rpm and 20°C gearhead temperature) [d)]	T_{012}	Nm	0,6	0,6	0,4	0,4	0,4	0,4	0,4	0,4	0,4
Max. torsional backlash	j_t	arcmin	Standard ≤ 3,3 / Reduced ≤ 2,3								
Torsional rigidity	C_{t21}	Nm/arcmin	1350	1350	1350	1250	1250	1350	1250	1250	1050
Max. axial force [e)]	F_{2AMax}	N	50000								
Max. tilting moment	M_{2KMax}	Nm	8800								
Efficiency at full load	η	%	90								
Service life (For calculation, see the Chapter "Information")	L_h	h	> 20000								
Weight incl. standard adapter plate	m	kg	–								
Operating noise (with n_1 = 3000 rpm no load)	L_{PA}	dB(A)	≤ 71								
Max. permitted housing temperature		°C	+90								
Ambient temperature		°C	0 to +40								
Lubrication			Lubricated for life								
Paint			Blue RAL 5002								
Direction of rotation			Motor and gearhead opposite directions								
Protection class			IP 65								
Moment of inertia (relates to the drive) Clamping hub diameter [mm] — G 24	J_1	kgcm²	2,73	2,49	2,46	2,42	2,42	2,42	2,42	2,42	2,42
Moment of inertia (relates to the drive) Clamping hub diameter [mm] — K 38	J_1	kgcm²	9,64	9,40	9,37	9,33	9,33	9,33	9,33	9,33	9,33

[a] Other ratios available on request
[b] Higher speeds are possible if the nominal torque is reduced
[c] For higher ambient temperatures, please reduce input speed
[d] Idling torques decrease during operation
[e] Refers to center of the output shaft or flange

Please contact us for information on the best configuration for S1 conditions of use (continuous operation).

4-stage:

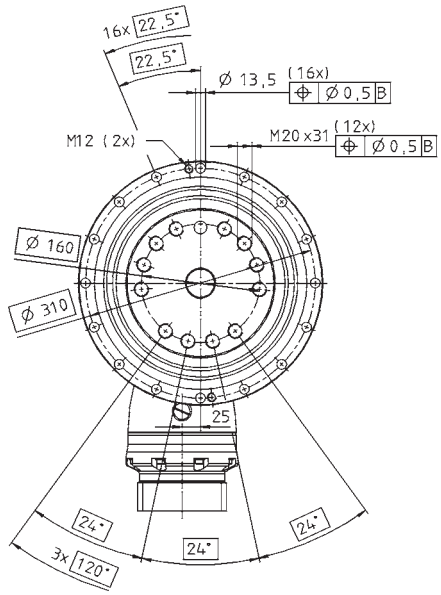

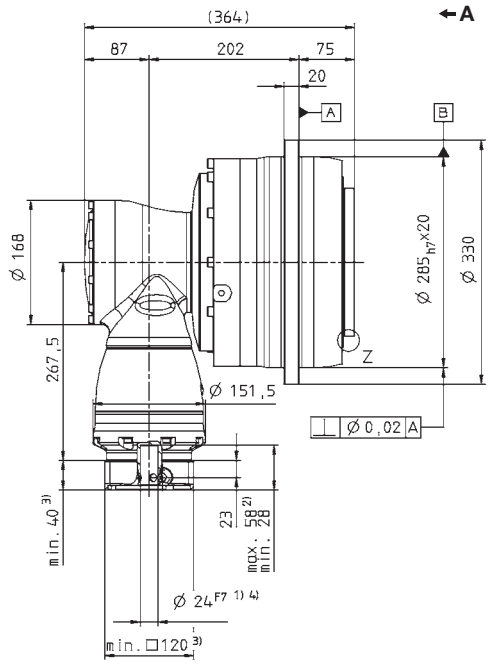

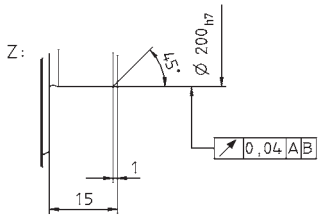

See technical data sheet for available clamping hub diameters (mass moment of inertia). Dimensions available on request.

Non-tolerated dimensions ±1 mm

1) Check motor shaft fit.
2) Min./Max. permissible motor shaft length. Longer motor shafts are adaptable, please contact us.
3) The dimensions depend on the motor.
4) Smaller motor shaft diameter is compensated by a bushing with a minimum thickness of 1 mm.

⚠ Motor mounting according to operating manual

TPK+ 110 MA 3-/4-stage

			3-stage							4-stage								
Ratio [a]	i		**66**	**88**	**110**	**137,5**	**154**	**220**	**385**	**330**	**462**	**577,5**	**770**	**1078**	**1540**	**2695**	**3850**	**5500**
Max. acceleration torque (max. 1000 cycles per hour)	T_{2B}	Nm	3100	3100	3100	3100	3100	2750	3100	3100	3100	3100	3100	3100	3100	3100	3100	2000
Nominal output torque (with n_{1N})	T_{2N}	Nm	1650	1650	1650	1650	1650	1650	1650	1650	1650	1650	1650	1650	1650	1650	1650	1400
Emergency stop torque (permitted 1000 times during the service life of the gearhead)	T_{2Not}	Nm	4800	5700	5700	6500	5600	5500	6500	4800	6500	6000	6500	6500	6500	6500	6500	6500
Nominal input speed (with T_{2N} and 20°C ambient temperature) [b), c)]	n_{1N}	rpm	2100	2300	2600	2600	2400	2400	2400	3000	3000	3000	3000	3000	3000	4100	4100	4100
Max. continuous speed (with 20 % T_{2N} and 20°C ambient temperature)	n_{1Ncym}	rpm	2800	3200	3600	3600	3200	3200	3200	3800	3800	3800	3800	3800	3800	4000	4000	4000
Max. input speed	n_{1Max}	rpm	4500	4500	4500	4500	4500	4500	4500	4500	4500	4500	4500	4500	4500	4500	4500	4500
Mean no load running torque (with n_1 = 3000 rpm and 20°C gearhead temperature) [d)]	T_{012}	Nm	6,0	4,6	3,6	-	4,4	3,5	-	0,9	-	-	-	-	-	-	-	-
Max. torsional backlash	j_t	arcmin	≤ 1,3															
Torsional rigidity	C_{t21}	Nm/arcmin	634	642	654	675	654	648	687	634	682	662	667	685	685	689	687	658
Max. axial force [e)]	F_{2AMax}	N	10050															
Max. tilting moment	M_{2KMax}	Nm	3280															
Efficiency at full load	η	%	92							90								
Service life (For calculation, see the Chapter "Information")	L_h	h	> 20000															
Weight incl. standard adapter plate	m	kg	45,4															
Operating noise (with n_1 = 3000 rpm no load)	L_{PA}	dB(A)	≤ 70															
Max. permitted housing temperature		°C	+90															
Ambient temperature		°C	0 to +40															
Lubrication			Lubricated for life															
Paint			Blue RAL 5002															
Direction of rotation			Motor and gearhead opposite directions															
Protection class			IP 65															
Moment of inertia (relates to the drive) Clamping hub diameter [mm] — E 19	J_1	kgcm²	-	-	-	-	-	-	-	0,89	1,06	0,76	0,76	0,76	0,69	0,68	0,68	0,68
G 24	J_1	kgcm²	-	-	-	-	-	-	-	2,46	2,63	2,33	2,32	2,32	2,26	2,25	2,25	2,25
H 28	J_1	kgcm²	5,48	4,27	3,64	3,58	3,14	2,87	2,84	-	-	-	-	-	-	-	-	-
K 38	J_1	kgcm²	12,72	11,52	10,89	10,83	10,39	10,12	10,09	-	-	-	-	-	-	-	-	-

[a] Other ratios available on request
[b] Higher speeds are possible if the nominal torque is reduced
[c] For higher ambient temperatures, please reduce input speed
[d] Idling torques decrease during operation
[e] Refers to center of the output shaft or flange

Please contact us for information on the best configuration for S1 conditions of use (continuous operation).

View A

3-stage:

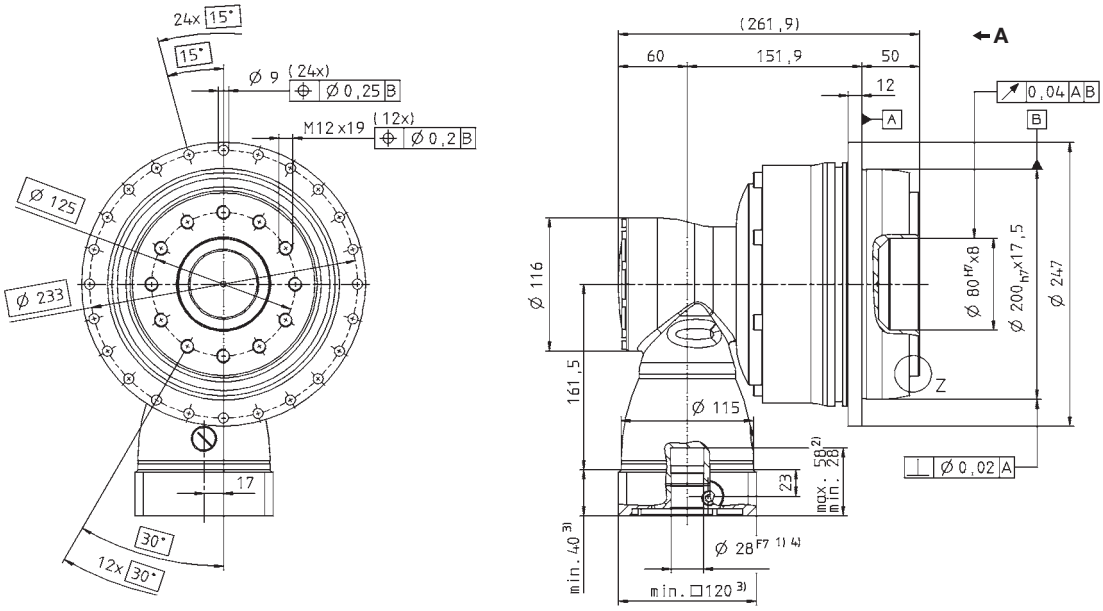

4-stage:

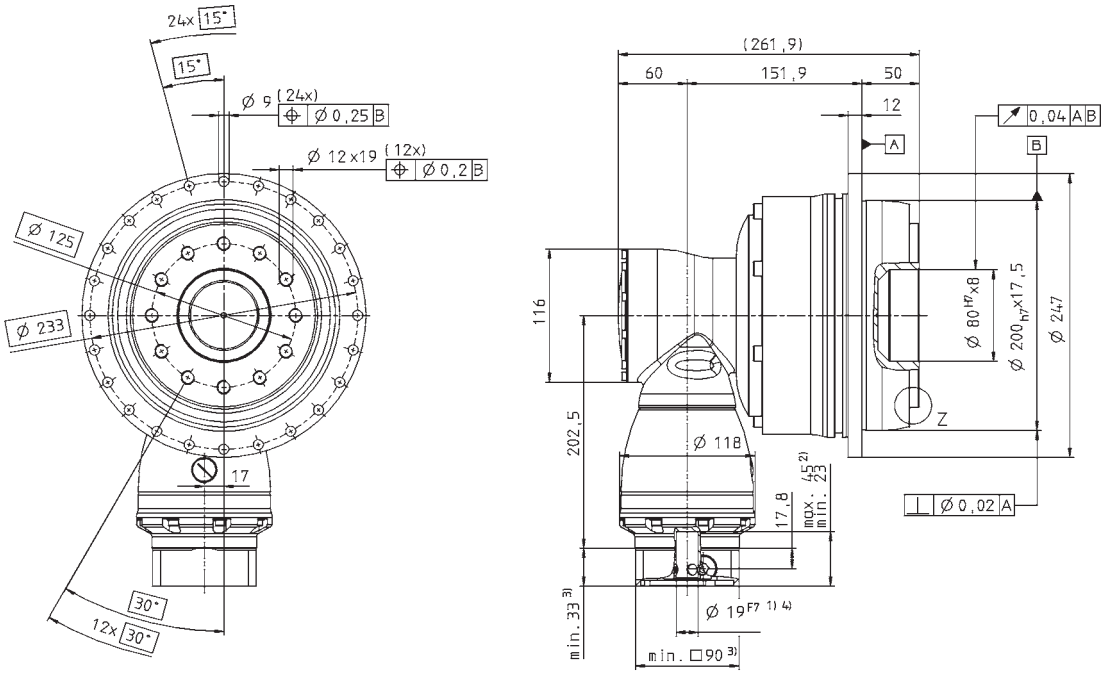

Z:

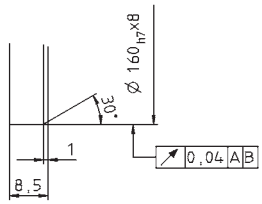

See technical data sheet for available clamping hub diameters (mass moment of inertia). Dimensions available on request.

Non-tolerated dimensions ±1 mm

1) Check motor shaft fit.
2) Min./Max. permissible motor shaft length. Longer motor shafts are adaptable, please contact us.
3) The dimensions depend on the motor.
4) Smaller motor shaft diameter is compensated by a bushing with a minimum thickness of 1 mm.

⚠ Motor mounting according to operating manual

TPK+ 300 MA 3-/4-stage

			3-stage							4-stage								
Ratio [a]	i		**66**	**88**	**110**	**137,5**	**154**	**220**	**385**	**330**	**462**	**577,5**	**770**	**1078**	**1540**	**2695**	**3850**	**5500**
Max. acceleration torque (max. 1000 cycles per hour)	T_{2B}	Nm	5500	5500	5500	5500	5500	4600	5500	5500	5500	5500	5500	5500	5500	5500	5500	3900
Nominal output torque (with n_{1N})	T_{2N}	Nm	3500	3500	3500	3500	3500	3500	3500	3500	3500	3500	3500	3500	3500	3500	3500	3500
Emergency stop torque (permitted 1000 times during the service life of the gearhead)	T_{2Not}	Nm	8800	11000	11000	11000	9900	8800	13250	8800	13250	11000	13250	13250	13250	13250	13250	13250
Nominal input speed (with T_{2N} and 20°C ambient temperature) [b), c)]	n_{1N}	rpm	1800	1900	2100	2100	1900	1900	1900	2800	2800	2800	2800	2800	2800	3100	3800	3800
Max. continuous speed (with 20 % T_{2N} and 20°C ambient temperature)	n_{1Ncym}	rpm	2300	2600	2900	2900	2600	2600	2600	3800	3800	3800	3800	3800	3800	4000	4000	4000
Max. input speed	n_{1Max}	rpm	4500	4500	4500	4500	4500	4500	4500	4500	4500	4500	4500	4500	4500	4500	4500	4500
Mean no load running torque (with n_1 = 3000 rpm and 20°C gearhead temperature) [d)]	T_{012}	Nm	11,0	8,2	6,9	6,5	9,2	6,7	6,4	1,5	2,2	1,0	0,9	0,8	0,6	0,4	0,4	0,4
Max. torsional backlash	j_t	arcmin	Standard ≤ 3,3 / Reduced ≤ 1,8															
Torsional rigidity	C_{t21}	Nm/arcmin	1099	1108	1114	960	1114	1111	979	1099	976	953	958	978	978	979	979	989
Max. axial force [e)]	F_{2AMax}	N	33000															
Max. tilting moment	M_{2KMax}	Nm	6500															
Efficiency at full load	η	%	92							90								
Service life (For calculation, see the Chapter "Information")	L_h	h	> 20000															
Weight incl. standard adapter plate	m	kg	–															
Operating noise (with n_1 = 3000 rpm no load)	L_{PA}	dB(A)	≤ 71															
Max. permitted housing temperature		°C	+90															
Ambient temperature		°C	0 to +40															
Lubrication			Lubricated for life															
Paint			Blue RAL 5002															
Direction of rotation			Motor and gearhead opposite directions															
Protection class			IP 65															
Moment of inertia (relates to the drive) Clamping hub diameter [mm] G 24	J_1	kgcm²	-	-	-	-	-	-	-	3,32	4,24	2,80	2,79	2,79	2,49	2,43	2,42	2,42
Moment of inertia (relates to the drive) Clamping hub diameter [mm] K 38	J_1	kgcm²	26,04	19,71	16,71	16,58	14,26	12,89	12,83	10,23	11,15	9,71	9,70	9,70	9,40	9,34	9,33	9,33

[a] Other ratios available on request
[b] Higher speeds are possible if the nominal torque is reduced
[c] For higher ambient temperatures, please reduce input speed
[d] Idling torques decrease during operation
[e] Refers to center of the output shaft or flange

Please contact us for information on the best configuration for S1 conditions of use (continuous operation).

View A

3-stage:

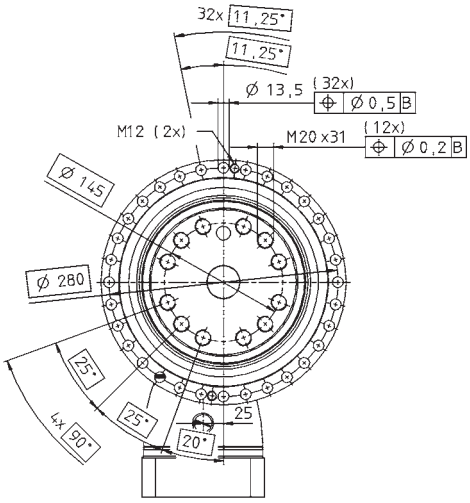

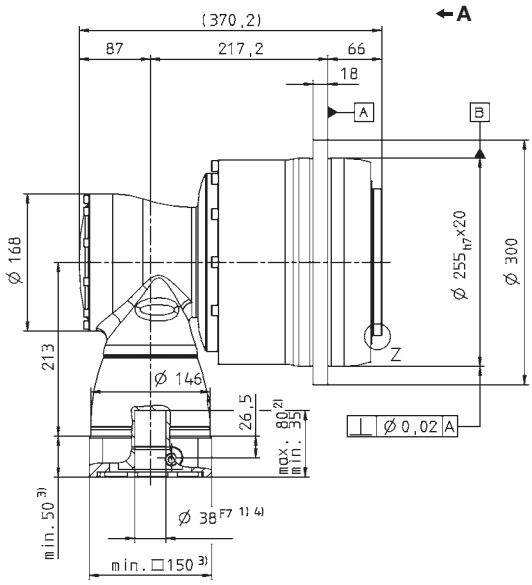

4-stage:

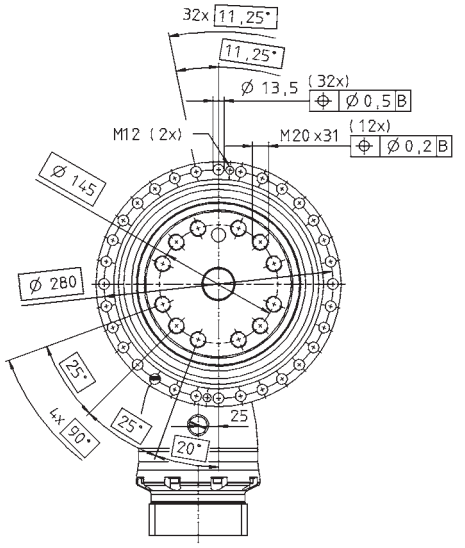

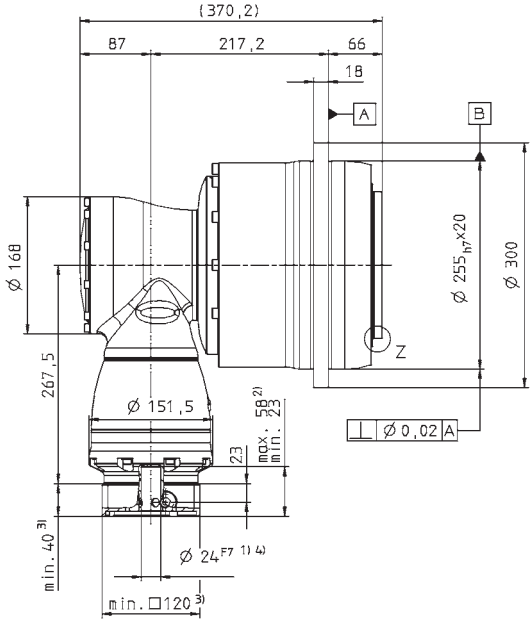

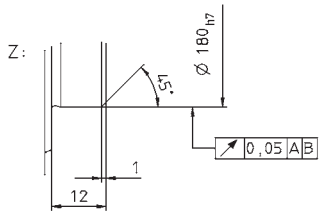

See technical data sheet for available clamping hub diameters (mass moment of inertia). Dimensions available on request.

Non-tolerated dimensions ±1 mm

1) Check motor shaft fit.
2) Min./Max. permissible motor shaft length. Longer motor shafts are adaptable, please contact us.
3) The dimensions depend on the motor.
4) Smaller motor shaft diameter is compensated by a bushing with a minimum thickness of 1 mm.

⚠ Motor mounting according to operating manual

TPK+ 500 MA 3-/4-stage

			3-stage							4-stage								
Ratio [a]	i		**66**	**88**	**110**	**137,5**	**154**	**220**	**385**	**330**	**462**	**577,5**	**770**	**1078**	**1540**	**2695**	**3850**	**5500**
Max. acceleration torque (max. 1000 cycles per hour)	T_{2B}	Nm	10000	10000	10000	10000	10000	10000	10000	10000	10000	10000	10000	10000	10000	10000	10000	7200
Nominal output torque (with n_{1N})	T_{2N}	Nm	4200	5400	5400	5400	5400	5400	5400	5400	5400	5400	5400	5400	5400	5400	5400	5400
Emergency stop torque (permitted 1000 times during the service life of the gearhead)	T_{2Not}	Nm	19800	23000	23000	25000	21300	19800	25000	19800	25000	25000	25000	25000	25000	25000	25000	25000
Nominal input speed (with T_{2N} and 20°C ambient temperature) [b), c)]	n_{1N}	rpm	1500	1700	1900	1900	1700	1700	1700	2600	2600	2600	2600	2600	2600	3100	3300	3300
Max. continuous speed (with 20 % T_{2N} and 20°C ambient temperature)	n_{1Ncym}	rpm	1800	2200	2600	2600	2300	2300	3100	3300	3300	3300	3300	3300	3300	3600	3600	3600
Max. input speed	n_{1Max}	rpm	4000	4000	4000	4000	4000	4000	4000	4000	4000	4000	4000	4000	4000	4000	4000	4000
Mean no load running torque (with n_1 = 3000 rpm and 20°C gearhead temperature) [d)]	T_{012}	Nm	18,8	15,3	12,6	12,8	16,9	13,8	13,7	2,7	4,0	2,0	1,8	1,7	1,2	1,1	1,0	1,0
Max. torsional backlash	j_t	arcmin	Standard ≤ 3,3 / Reduced ≤ 1,8															
Torsional rigidity	C_{t21}	Nm/arcmin	1879	1890	1901	1747	1899	1898	1772	1879	1766	1735	1742	1770	1770	1772	1772	1786
Max. axial force [e)]	F_{2AMax}	N	50000															
Max. tilting moment	M_{2KMax}	Nm	9500															
Efficiency at full load	η	%	92							90								
Service life (For calculation, see the Chapter "Information")	L_h	h	> 20000															
Weight incl. standard adapter plate	m	kg	–															
Operating noise (with n_1 = 3000 rpm no load)	L_{PA}	dB(A)	≤ 71															
Max. permitted housing temperature		°C	+90															
Ambient temperature		°C	0 to +40															
Lubrication			Lubricated for life															
Paint			Blue RAL 5002															
Direction of rotation			Motor and gearhead opposite directions															
Protection class			IP 65															
Moment of inertia (relates to the drive) Clamping hub diameter [mm] — K 38	J_1	kgcm²	-	-	-	-	-	-	-	12,43	15,36	10,93	10,92	10,91	10,13	9,95	9,91	9,91
Moment of inertia (relates to the drive) Clamping hub diameter [mm] — M 48	J_1	kgcm²	75,54	52,83	42,94	42,67	34,37	29,87	29,73	27,14	30,07	25,64	25,63	25,62	24,84	24,66	24,62	24,62

[a] Other ratios available on request
[b] Higher speeds are possible if the nominal torque is reduced
[c] For higher ambient temperatures, please reduce input speed
[d] Idling torques decrease during operation
[e] Refers to center of the output shaft or flange

Please contact us for information on the best configuration for S1 conditions of use (continuous operation).

3-stage:

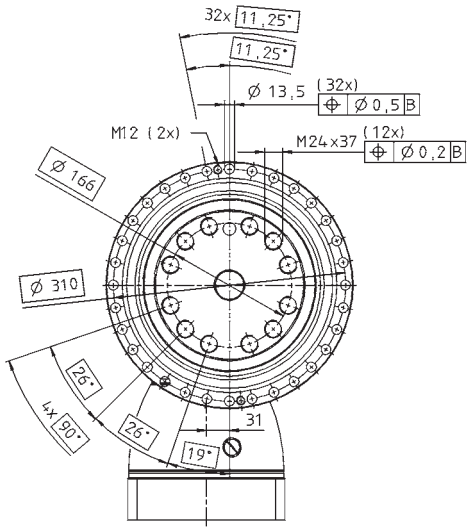

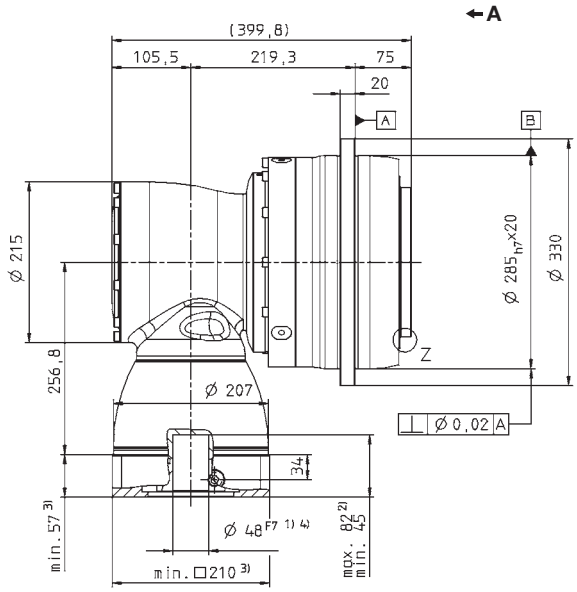

4-stage:

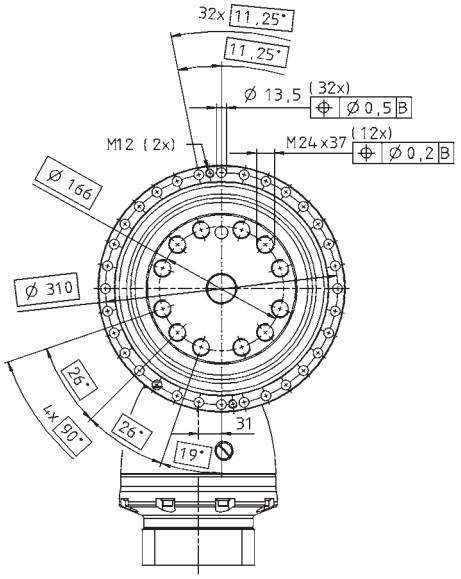

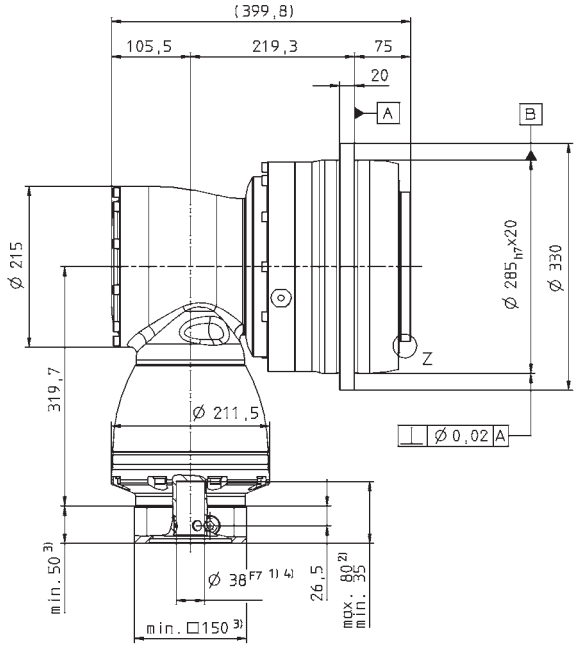

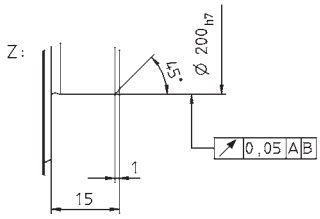

See technical data sheet for available clamping hub diameters (mass moment of inertia). Dimensions available on request.

Non-tolerated dimensions ±1 mm

1) Check motor shaft fit.
2) Min./Max. permissible motor shaft length. Longer motor shafts are adaptable, please contact us.
3) The dimensions depend on the motor.
4) Smaller motor shaft diameter is compensated by a bushing with a minimum thickness of 1 mm.

⚠ Motor mounting according to operating manual

Order Information

Gearhead type	Type code	Gearhead variations	Gearhead model	Number of stages
TPK+ 300 – TPK+ 500 SPK+ 210 – SPK+ 240	S = Standard F = Food lubrication B = Modular output combination	M = Motor attachment gearhead	A = High Torque (only TPK+) F = Standard	2 = 2-stage 3 = 3-stage 4 = 4-stage

Order codes

TPK+/SPK+

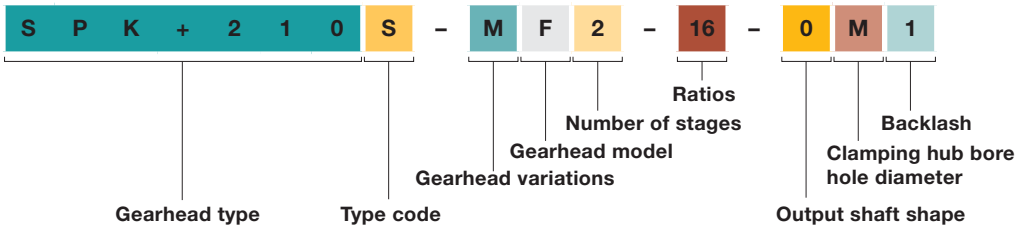

cymex® 3.1 – Software for drive technology

cymex® enables the simple dimensioning and design of complete drive trains (application + motor + gearhead). Standard predefined applications make precise calculations so much easier. Consideration for all major influencing factors and specific customer parameters guarantee the perfect design for your drive system.

Established features

- Standard predefined applications
- cymex® profiler for creating simple or complex motion and load profiles
- Functions for importing motion profiles from SAM, Excel, ASCII
- Application data and technical data documented in Microsoft Word
- Offline CAD generator: 3D gearhead files including all attached components compatible with the selected motor
- Database containing all current WITTENSTEIN alpha products
- Largest global database with more than 7000 motors offered by all current manufacturers

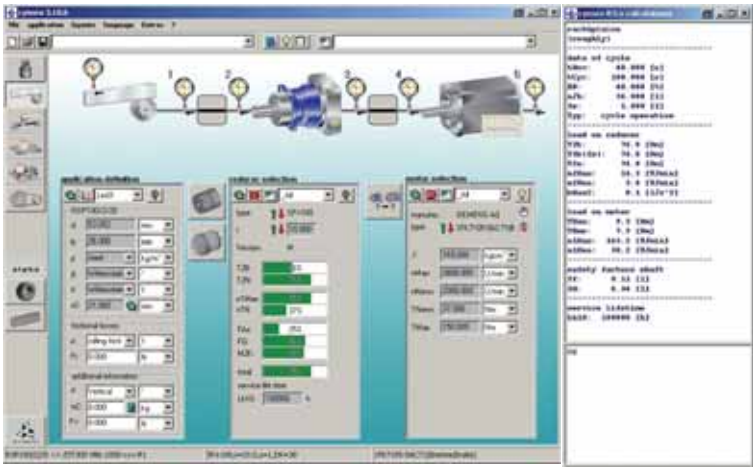

Ratios	Output shape	Clamping hub bore hole diameter	Backlash
See technical data sheets.	0 = smooth shaft/flange 1 = shaft with key 2 = involute to DIN 5480 3 = system output 4 = other (see technical data sheets)	(see technical data sheets and clamping hub diameter table)	1 = Standard 0 = Reduced (see technical data sheets)

WITTENSTEIN | alpha

WITTENSTEIN, Inc. · 1249 Humbracht Circle · Bartlett, IL 60103 · USA · Tel. +1 630 540 5300

www.wittenstein-us.com

SPK+TPK+ katalog_us_2009_I Technical changes reserved